COLLEGE OF DUPAGE
REGULAR BOARD MEETING

BOARD APPROVAL

---

1. SUBJECT

Physical Education Center (PEC) Arena Basketball Backstops

2. REASON FOR CONSIDERATION

A single purchase exceeding the statutory limit of $25,000 must be approved by the Board of Trustees.

3. BACKGROUND INFORMATION

This project involves the installation of two (2) new retractable basketball backstops for the PEC Arena competition court. The new system will be suspended from the ceiling structure and have the ability to retract up when not in use. This will allow for increased functionality of the arena while managing COD athletics and external athletic competitions.

A legal notice for an Invitation for Bids was published on February 28, 2018 in the Daily Herald; the invitation was also posted to the College of DuPage Purchasing website and distributed to in-district Chambers of Commerce. Seven (7) vendors were directly solicited. Twenty-seven (27) vendors downloaded the bid documents. A pre-bid meeting was held on March 5, 2018 at 11:00 a.m. in the College of DuPage Purchasing Department Conference Room (BIC 1B03A). A public opening was held on March 14, 2018 at 11:00 a.m. in the College of DuPage Purchasing Department Conference Room (BIC 1B03A). The following individuals were in attendance: Jacoby Radford (COD Purchasing Manager/Recorder), Susan Castellanos (COD Buyer/Facilitator), Joanne Ivory (COD Associate Dean, Continuing Education/Agent of the Board), Chris Wosachlo (COD Energy/Project Manager, Facilities Operations) and a representative from one (1) firm. Two (2) bids were received. No women/minority owned businesses submitted bids.

Following is a recap of the bid tabulation:

Vendor	Total Base Bid
Nikao Group, LLC.	**$134,234.00**
Carroll Seating Company	$135,215.00

Lowest bid in bold

The recommended award is to the lowest responsible bidder.

Budget Status

	FY2017	FY2018		
GL Account	Prior Year Spend	Annual Budget	YTD Spend	Available Balance
02-90-20152-5804001	$ -	$ 136,000	$ -	$ 136,000
Arena Main Ct Bball Backboards : Building Remodeling Exps				
			FY2018 Request	**$ 134,234**

**YTD Spend equals actuals plus committed as of 04/05/2018.*

This purchase supports the Strategic Long Range Plan Goal #1 Accountability: Being transparent, answerable and responsible to all stakeholders, and Goal #8 Infrastructure: Maintaining, improving and developing structures, systems and facilities necessary for the delivery of high quality education and meaningful cultural events.

This purchase complies with State Statute, Board Policy and Administrative Procedures.

4. RECOMMENDATION

That the Board of Trustees awards the PEC Arena Basketball Backstops to the lowest responsible bidder, Nikao Group,LLC., 2400 Hassell Rd, Hoffman Estates, IL 60169 for the lump sum bid amount of $134,234.00.

Staff Contact: Bruce Schmiedl – Director, Facilities Planning & Development

Item 11I
April 19, 2018

BOARD APPROVAL

SIGNATURE PAGE FOR

PEC Arena Basketball Backstops

ITEM(S) ON REQUEST

That the Board of Trustees awards the PEC Arena Basketball Backstops to the lowest responsible bidder, Nikao Group,LLC., 2400 Hassell Rd, Hoffman Estates, IL 60169 for the lump sum bid amount of $134,234.00.

BOARD CHAIR	4/19/18 DATE
Christine M. Ferme BOARD SECRETARY	4/19/18 DATE

BIDDER: _____

College of DuPage

COMMUNITY COLLEGE DISTRICT NO. 502

BID NUMBER: 2018-B0036

PE ARENA GYMNASIUM BASKETBALL BACKSTOP FOR COLLEGE OF DUPAGE

BIDS DUE: **Wednesday, March 14, 2018 at 11:00 a.m. Central Time**

In the event of College closure due to inclement weather, bid deadline will be extended to the next business day at the same time.

RETURN BIDS TO:

COLLEGE OF DUPAGE
PURCHASING DEPARTMENT
BIC BUILDING, ROOM 1B03
425 FAWELL BLVD.
GLEN ELLYN, ILLINOIS 60137

A pre-bid meeting is scheduled for **Monday, March 05, 2018 at 11:00 a.m**. in the Purchasing Office; BIC 1B03A at 425 Fawell Blvd, Glen Ellyn IL. 60137

Issue Date:	**February 28, 2018**

ISSUED BY THE COLLEGE OF DUPAGE PURCHASING DEPARTMENT

Bid No. 2018-B0036

COLLEGE OF DUPAGE

Purchasing Department

425 Fawell Boulevard
Glen Ellyn, Illinois 60137-6599
http://www.cod.edu

PHONE (630) 942-2217

February 28, 2018

INVITATION TO BID

Sealed bids for **PE Arena Gymnasium Basketball Backstop for College of DuPage** will be received by the College of DuPage, District 502, at the office of the Purchasing Manager, Berg Instructional Center (BIC) Building, Room 1B03, 425 Fawell Blvd., Glen Ellyn, IL 60137, until **11:00 a.m. Central Time, Wednesday, March 14, 2018,** at which time they will be publicly opened. In the event of College closure due to inclement weather, bid deadline will be extended to the next business day at the same time.

A pre-bid conference and site visit is scheduled for **Monday, March 05, 2018 at 11:00 a.m**. in the Purchasing Office, BIC 1B03 at 425 Fawell Blvd., Glen Ellyn, IL. 60137. A site visit will immediately follow. The pre-bid conference is not mandatory, but highly recommended.

Any bid received after the date and time stated above will be returned unopened. College of DuPage shall not be responsible for bids that are not received at the specific office location indicated above by the stated deadline. It is solely, the bidder's responsibility, to ensure that adequate time is allowed for timely and accurate delivery.

Prices offered shall be F.O.B. Destination, College of DuPage, 425 Fawell Blvd., Glen Ellyn, IL 60137. Prices must be firm. No bids will be accepted on the basis of a price prevailing at the time of shipment.

The award(s) of the contract will be made to the lowest responsible and qualified bidder whose bid complies with all the requirements prescribed. Brand or trade names in bid specifications are used for identification purpose only.

No bid shall be withdrawn for a period of ninety (90) days after the bid opening date without the consent of the College.

LEGAL NOTICE

BID NOTICE

No. 2018-B0036

The College of DuPage is accepting sealed bids for the **PE Arena Gymnasium Basketball Backstop for College of DuPage** Bid documents may be downloaded from the Purchasing Website at www.cod.edu/about/purchasing/requests/ by clicking on the link for this bid and following the instructions.

Bids are due to the College of DuPage Purchasing Department in the Berg Instructional Center (BIC) Building, Room 1B03, 425 Fawell Blvd., Glen Ellyn, IL 60137 up to and no later than **11:00 a.m. Central Time, Wednesday, March 14, 2018,** at which time they will publicly opened.

A pre-bid conference and site visit is scheduled for Monday, March 05, 2018 at 11:00 a.m. in the Purchasing Office, BIC 1B03 at 425 Fawell Blvd, Glen Ellyn Il 60137. A site visit will immediately follow. The pre-bid conference is not mandatory, but highly recommended.

College of DuPage Board of Trustees Reserves the right to reject any and all responses. This invitation is issued in the name of the Board of Trustees of College of DuPage, Community College District 502, Glen Ellyn, Illinois.

Table of Contents

BID SUBMISSION CHECKLIST

Things to Remember When Submitting a Response to an Invitation to Bid for the College of DuPage

1. ☐ **Read the *entire* document.** In your review, note critical items such as: blackout period, required goods and services, submittal dates, submission requirements, etc.

2. ☐ **Note the contact information provided.** The Purchasing Office Buyer at purchasing@cod.edu is the single point of contact for this Invitation to Bid and is the only person with whom you are allowed to communicate regarding this bid. This person is an excellent source of information for any questions you may have.

3. ☐ **Take advantage of the "question and answer" period.** Submit your questions to the Purchasing Department by the date in the Invitation to Bid and view the answers given in the formal addenda issued for the Invitation to Bid. All addenda issued for an Invitation to Bid will be emailed to each company that downloaded the bid documents and will include all questions asked and answered concerning the Invitation to Bid. Please ensure when downloading the bid documents, you use a valid email address.

4. ☐ **Do not alter, add to, or delete and part of the Bid documents without prior approval.** Please refer to the section titled *Exceptions* for instruction on how to request a deviation to the original Invitation to Bid.

5. ☐ **Ensure all Addenda are signed.** Before submitting your response, check the College Purchasing website at http://www.cod.edu/about/purchasing/requests/index.aspx to see whether any addenda were issued for this Bid request. If so, you must submit a signed copy of the addenda along with your bid response.

6. ☐ **Review and read the bid document again to make sure you have addressed all requirements.**
*Your original response and the requested electronic copy (flash drive) must be identical and be complete.
*Bids will not be accepted if Sections 6, 7 and 8 are not completed. (Please note there are two (2) signature lines in Section 7 that must be signed.)
*If your company is a Certified Women-Owned, Minority-owned, or Persons with Disability-owned business, please include a copy of any and all certifications.

7. ☐ **Submit your response on time.** Note the date and time listed on the front page of the Invitation to Bid and be sure to submit all required items on time. Late responses will not be accepted and will be returned, unopened. Ensure the box (s) containing your proposal is appropriately labeled. Please allow adequate time for delivery to the Purchasing Department.

8. ☐ **Important dates to know:**

   - Bid Publication Date – 02/28/18
   - Pre-Bid Meeting Date - 03/05/18 at 11:00 a.m.
   - Questions Due – on or before 12:00 p.m. on 03/07/18
   - Bids Due – 03/14/18 at 11:00 a.m.
   - Target Board Approval Date – 04/19/18

1.0 GENERAL INFORMATION

1.1 DEFINITIONS

A. **BIDDER** shall mean the individual or business entity submitting a Bid to supply any or all of the services or goods required by the Bid Documents.

B. **BID** shall mean the Bid Documents as completed by the Bidder which constitutes the Bidder's offer.

C. **CONTRACT** shall mean the agreement between the College and Contractor as set forth in the Bid Documents and as awarded by the College of DuPage Board of Trustees.

D. **BID DOCUMENTS** shall mean collectively the Instructions to Bidders, General Conditions, Special Conditions, Specifications, Attachments, and Addenda, if any, Bid, Site Inspection Certificate, Contractor Certifications and Forms for Minority Participation. The above documents shall be considered as one integrated document setting forth the obligations of the parties.

E. **CONTRACTOR** shall mean the individual or business entity submitting a Bid and to whom the College of DuPage Board of Trustees awards the Contract.

F. **COLLEGE** shall mean the College of DuPage, Community College District No. 502, a body politic and corporate of the State of Illinois.

G. **DIRECTOR** shall mean the person or persons authorized by the College to act in connection with this Contract. Such authorization shall not include any power to change the scope of the Contract or to obligate the College to pay additional sums beyond the amount of the Contract awarded by the College of DuPage Board of Trustees.

H. **PURCHASING MANAGER** shall mean the Purchasing Manager of the College of DuPage.

I. **SPECIFICATIONS** shall mean the description of the required services, Contract Goods, equipment, personnel, volume and use statistics and all requirements for the scope of work set forth in the Bid Documents.

1.2 BIDS TO CONFORM TO REQUIREMENTS OF LEGAL ADVERTISING

The College will not entertain or consider any Bid responses: (i) received after the exact time specified in the legal advertisements; (ii) not accompanied by the required bid deposit/bond, if required; or (iii) in any other way failing to comply fully with the conditions stated in the legal advertisement.

1.3 COMPLIANCE

Submissions under this Invitation to Bid shall be for items at least equal to or better than the quality and performance characteristics stated herein. The burden of proof that product and services meet specifications shall be documented by the bidder and be provided as part of the submitted bid. Failure to provide complete documentation of the product compliance with specifications required may result in bid rejection.

1.4 COMPLIANCE WITH LAWS - PUBLIC CONTRACTS

This Contract is a competitively bid public contract of the College of DuPage subject to laws and ordinances governing public contracts. The Bidder shall at all times observe and comply with all laws, ordinances, regulations and codes of the Federal, State and other local government agencies which may in any manner affect the preparation of the Bid or the performance of the Contract. If the Bidder observes that any of the Bid Documents are at variance therewith, it shall promptly notify the Purchasing Manager in writing and necessary changes shall be effected by appropriate modification.

1.5 REGULATIONS

The Contractor or Subcontractor, warrants that they are familiar with and they shall comply with all Federal, State, and Local Laws, statutes, ordinances, rules and regulations and the orders and decrees of any courts or administrative bodies or tribunals in any manner affecting the performance of the Contract, including, without limitation, Workmen's Compensation Laws, minimum salary and wage statutes and regulations, laws with respect to permits and licenses and fees in connection therewith, laws regarding maximum working hours and regulations with respect to use of explosives. No plea of misunderstanding or ignorance thereof will be considered. Whenever required, the Contractor, or Subcontractor, shall furnish the college with satisfactory proof of compliance with said Federal, State and Local Laws, statutes, ordinances, rules, regulations, orders, and decrees.

1.6 BID MODIFICATIONS

Unless indicated, it is understood that bids are in strict accordance with specification requirements. Bids shall be deemed final, conclusive, and irrevocable. No bid shall be subject to correction or amendment for any error or miscalculation. Bid prices shall include cost of materials as specified, any applicable discounts and shipping. Installation costs shall be included only when indicated on page one. Installation shall include, but is not limited to, all assembly required, setting in place, and mounting all materials at various campus locations.

1.7 PRICES FIRM

All prices quoted in the Bid shall be firm and will not be subject to increase during the term of the Contract awarded to the Contractor, except as otherwise provided in the Bid Documents.

1.8 AWARD OF CONTRACT

The award of the contract will be made within ninety (90) calendar days after the opening of bids to the lowest responsible and qualified bidder whose bid complies with all the requirements prescribed. The successful bidder will be notified by electronic mail that their bid has been accepted and that they have been awarded the contract. Notification will also be posted on the College's Purchasing website at http://www.cod.edu/about/purchasing/ . Failure to execute performance as per accepted bid may result in legal action by the College of DuPage to recover damages.

If a contract is not awarded within ninety (90) days after the opening of bids, a bidder may file a written request with the Purchasing Manager on the withdrawal of their bid and the Purchasing Manager will permit such withdrawal.

The bid security (if required) of all except the three (3) low bidders will be returned promptly after the bids have been checked, tabulated, and the relation of the bids established. Bid security of the three (3) lowest bidders, if required in legal notice, will be returned as soon as the contract and the bond of the successful bidder have been promptly executed and approved. If contracts cannot be awarded promptly, the College may permit the three (3) lowest bidders to substitute bid bonds for bank cashier's checks, bank drafts or certified checks submitted with their bids. Bid bonds executed by corporate surety companies shall be satisfactory to the Owner, but such substitution shall not be made until a period of fifteen (15) days has elapsed after the date of opening of bids and bond forms furnished by the College shall be used.

1.9 CONSIDERATION OF BIDS

The College reserves the right to reject or accept any or all Bid responses, to extend the bidding period, to waive technicalities in the documents and/or to direct that the project be abandoned or rebid prior to award of the Contract.

1.10 COMPETENCY OF BIDDER

No Bid will be accepted from or Contract awarded to a Bidder that is in arrears or is in default to the College upon any debt or Contract, or that is a defaulter, as surety or otherwise upon any obligation to said College, or has failed to perform faithfully any previous contract with the College.

1.11 BIDDER WARRANTIES

The submission of a Bid shall constitute a warranty that: (i) Bidder has carefully and thoroughly reviewed the Bid Documents and has found them complete and free from ambiguities and sufficient to describe the Contract work; (ii) Bidder and all workmen and/or employees it intends to use in the performance of this Contract are skilled and experienced in the type of work or services called for by the Bid Documents; and (iii) neither the Bidder nor any of its employees, agents, suppliers or subcontractors have relied on any verbal representations from the College, or any of the College's employees, agents, or consultants, in preparing the Bid.

1.12 PAYMENT REMITTANCE

All College vendors are required to receive payment from the College via an Automated Clearing House (ACH) transfer. Instructions to register for ACH payments will be sent, upon request, to successful bidders. Failure to comply with the ACH requirements may result in termination of the contract or purchase order. College ACH transfers typically occur the third week of each month. Invoices must be received at least 3 weeks prior to each ACH payment release. You are strongly encouraged to set up your account upon notice of award to avoid a delay payment.

1.13 CASH BILLING DISCOUNTS

Cash billing or percentage discounts for payment will not be considered in evaluating Bids.

1.14 LOCAL BUSINESS PREFERENCE

When two (2) or more responsible bidders submit the same low bid, the contract award will be determined by drawing lots in a public meeting unless one bidder is a local bidder within the District boundaries and one is a non-local bidder, in which event the local bidder will be awarded the contract.

1.15 EQUAL EMPLOYMENT OPPORTUNITY

In the hiring of employees for the performance of work under the Contract and any subcontract thereunder, no Contractor or Subcontractor shall, by reason of race, color, sex, religion, national origin, ancestry, age, marital status, disability, unfavorable military discharge or sexual orientation discriminate against any citizen of the United States, in the employment of Labor or workers, who are qualified and available to perform work to which the employment is related. Neither shall any Contractor or Subcontractor, or any person on behalf of either, discriminate against or intimidate any employee hired for the performance of work under this Contract on account of race, color, sex, religion, national origin, ancestry, age, marital status, disability, unfavorable military discharge or sexual orientation.

1.16 TAX EXEMPTION

College of DuPage District #502 is exempt from Federal, State and Municipal taxes. Exemption certificates will be furnished upon request.

1.17 HOLD HARMLESS CLAUSE

The Respondent agrees to indemnify, hold harmless and defend College of DuPage, its agents, servants, and employees, and each of them against, and hold it and them harmless from, any and all lawsuits, claims, demands, liabilities, losses and expenses, including court costs and attorney’s fees, for or on account of any injury to any person, or any death at any time resulting from such injury, or any damage to property, which may arise or which may be alleged to have arisen out of or in connection with the work covered by this contract.

1.18 CONTRACTOR'S LIABILITY INSURANCE

The Contractor shall not commence work under this contract until all insurance required herein is obtained and approved by the Owner. Nor shall the Contractor allow any subcontractor to commence work until all similar insurance required of the subcontractor has been so obtained.

The Contractor shall furnish the College of DuPage with a Certificate of Insurance, with College of DuPage, its trustees, officers, agents, employees, and any other parties designated by COD named as an additional insured for Commercial General and Automobile Liability, showing the minimum coverage indicated below. Insurance companies must have a Best Rating of at least A VI and otherwise be acceptable to the College. Workers' compensation insurance shall include a waiver of subrogation in favor of the College of DuPage. The College will also be shown as the certificate holder. Further, the Certificate of Insurance shall state that coverage provided is primary to any other coverage available to College of DuPage. An endorsement page showing coverage must accompany the certificate of insurance. The foregoing certificate shall contain a provision that coverage afforded under the policies will not be cancelled or non-renewed until at least sixty (60) days prior written notice has been given to College of DuPage.

TYPE OF INSURANCE	**MINIMUM INSURANCE COVERAGE**
	Combined Single Limit Per Occurrence/Aggregate
Commercial General Liability including: 1. Premises – Operations 2. Explosion, Underground and Collapse Hazard 3. Products/Completed Operations 4. Contractual Insurance 5. Broad Form Property Damage 6. Independent Contractors 7. Bodily Injury	$1,000,000 / $2,000,000
Automobile Liability Owned, Non-owned, or Rented	$1,000,000 / $2,000,000
Workers' Compensation and Employers' Liability	As Required by Applicable Laws.
Professional Liability	If Performance Specifications are Required by the Contract

1.19 PREVAILING WAGE ACT

When applicable, and as a condition of receiving payment, Contractor must pay its employees prevailing wages in the locality in which the work is to be performed as establish for Public Works (construction and maintenance of a public work) prevailing wage and other requirements under Contract for Public Workers 820 ILCS 130/4. When required by the College Contractor shall provide a copy of the certified payroll on request. Contractor is responsible for contacting the Illinois Department of Labor to ensure understanding of prevailing wage requirements.

The prevailing rates of wages are determined by the Illinois Department of Labor and are available on the Department's official website: http://www.illinois.gov/idol/Laws- Rules/CONMED/Pages/prevailing-wage-rates.aspx. The College of DuPage has adopted the resolution regarding the prevailing wage rates for DuPage County in accordance with Illinois Prevailing Wage Act and are available the College's website: http://www.cod.edu/about/purchasing/illinois_prevailing_wage_act.aspx .

1.20 BUSINESS ENTERPRISE PROGRAM

The College of DuPage encourages the participation of qualified minorities, females, and persons with disabilities owned businesses in public contracts. It is the practice of the College to ensure full and equitable economic opportunities to persons and businesses that compete for business with the College of DuPage, including minorities, females, and persons with disabilities owned business enterprises The College is committed to the economic development of disadvantaged business enterprises and the award of contracts

to businesses owned by minorities, females, and persons with disabilities for services to the extent provided by the Business Enterprise for Minorities, Females and Persons with Disabilities Act ("Act"), 30 ILCS 575.

END OF SECTION

2.0 INSTRUCTIONS TO BIDDERS

2.1 OUTSIDE DOCUMENT DISCLAIMER

The College of DuPage cannot warrant, represent, or guarantee the accuracy or completeness of documents which have not been obtained directly from the College. If you have obtained these documents from a third party source, the College is not responsible for any loss or damage including, but not limited to, time, money, or goodwill arising from errors, inaccuracies or omissions in any third party bid documents.

To obtain official documents, please visit: https://www.cod.edu/about/purchasing/requests/index.aspx . Click on the link for this project, and follow the prompts to enter your information onto our vendor list and download the original documents. This will ensure your contact information is registered on our vendor list, and we can send you any addenda that may be issued. This website is the only official website for prospective bidders to obtain digital copies of bid documents. It is the responsibility of each prospective bidder to verify the completeness of their printed bid documents before submitting a bid and accompanying executed addenda acknowledgement, and other required forms.

2.2 BLACKOUT PERIOD

Under no circumstances are respondents to contact or discuss this Invitation to Bid, or any of the information contained herein or about this project in general, with any College of DuPage trustee, employee, vendor, contractor or subcontractor, other than using the methods outlined in this bid. Respondents are strictly forbidden from visiting the College's locations or approaching any College trustee, employee, vendor, contractor or subcontractor for any information related to this Invitation to Bid or this project without the direct knowledge and authorization in writing in advance from the Purchasing Manager or Buyer. Violation of these provisions may subject the respondent to immediate disqualification.

Initial your understanding of this requirement_____

2.3 REQUESTS FOR INFORMATION/CLARIFICATION

If any firm submitting a bid for this project is in doubt as to the true meaning of the specifications or other documents or any part thereof, bidder shall request clarification from the Purchasing Department. Questions must be submitted in writing and be directed via email to the Purchasing Department at purchasing@cod.edu no later than **Wednesday, March 07, 2018 at 12:00 p.m. Central Time**. Questions for which answers are provided will be communicated to all registered recipients of bid documents via addendum. All issued addenda must be signed and returned to the College as per the instructions in the addenda or bid will not be accepted.

2.4 SUBMISSION OF BIDS

To be assured of consideration, Bids must be received by the College of DuPage in the College's in Purchasing Department, BIC-1B03, no later than **11:00 a.m. Central Time on Wednesday, March 14, 2018.** Failure by a delivery service company or person to meet the deadline will not excuse the Bidder from the deadline requirement. It is solely the Bidder's responsibility to ensure that adequate time is allowed for timely, accurate delivery and that the Bid is received as required.

All Bidders shall submit:

One (1) *sealed* original copy of the Bid; one (1) copy
and one (1) flash drive containing all completed documents of the Bid.

Bids must be in a sealed envelope and delivered to:

Purchasing Manager
ATTN: Bid No. 2018-B0036
College of DuPage
BIC Building - Room 1B03
425 Fawell Blvd.
Glen Ellyn, Illinois 60137

Bids must be received by the date and hour of the Bid Opening as shown in the legal advertisement. The sealed envelope submitted by the Bidder shall carry the following information on the face of the envelope: Bidder's name, address, Bid Notice Number, advertised date of Bid Opening and the hour designated for Bid Opening as shown in the legal advertisement. Unless otherwise stated, all blank spaces on the bid forms shall be fully completed. Bidder bears all responsibility for error or omissions in the submission of the Bid.

2.5 EXCEPTIONS

If any Respondent intends to take any deviations or exceptions from the Specifications or other bid Documents, Respondent shall submit to the Purchasing Manager/Buyer a written request for a deviation or exception at least 5 business days prior to the date and time of advertised bid opening date. If the Project Manager considers such deviation or exception acceptable, the Purchasing Manager/Buyer shall issue an Addendum setting forth such deviation or exception from the Specifications or other which shall be applicable to all Respondents submitting a response.

If no Addendum is issued by the Purchasing Manager/Buyer, then such deviation or exception shall be deemed rejected.

The College may reject any response containing deviations or exceptions not previously accepted through a written Addendum. A copy of such Addendum will be e-mailed or delivered to each Respondent receiving a set of such bid Documents. Respondent shall acknowledge receipt of each Addendum issued in the space provided on the bid form or via a signed addendum. Failure to acknowledge receipt of addenda may result in disqualification of the Bid. All written requests for deviations or exceptions shall be sent to purchasing@cod.edu.

Initial understanding of this requirement: _____

2.6 ERROR IN BID

Where a bidder claims to have made a mistake, such mistake must be called to the attention of the Purchasing Manager within twenty-four (24) hours after the opening of bids. Within forty-eight (48) hours of the bid opening, bidder shall submit to the College's designated contracting officer original documentary evidence and a detailed explanation of how the mistake was made. Failure to conform to this requirement precludes the bidder from withdrawing its bid based upon a bid mistake. If such notice, proof and explanations have been tendered, and the contracting officer is convinced that a bona fide mistake has been made, the contracting officer may recommend to the Board of Trustees that the bidder be allowed to withdraw its bid and recommend that the bid be awarded to the next lowest responsible, responsive bidder. If the Board determines by majority vote, that the bidder has made a bona fide error, no award will be made upon such bid and the bid security will be returned.

2.7 WITHDRAWAL OF BIDS

Bidders may withdraw their Bids at any time prior to the time specified in the legal advertisement as the date and hour set for the Bid Opening. However, no Bidder shall withdraw, cancel or modify its Bid response for a period of ninety (90) calendar days after said advertised Bid Opening.

2.8 NOTICES

All communications and notices between the College and Bidders regarding the Bid Documents shall be in writing and hand delivered or delivered via United States mail, postage prepaid, or via email. Notices to the Bidders shall be addressed to the name and address or email address provided by the Bidders; notices to the Purchasing Manager shall be addressed to Purchasing Department, College of DuPage, BIC Building - Room 1B03, 425 Fawell Blvd., Glen Ellyn, Illinois 60137, or purchasing@cod.edu.

2.9 BID DEPOSIT

When required in the legal advertisement, the Bid shall be accompanied by cashier's check, certified check or surety bond in the amount shown in the legal advertisement or as may be prescribed in these Bid Documents. A certified or cashier's check shall be drawn on a responsible bank doing business in the United States and shall be made payable to the order of the College of DuPage. The Surety issuing the bond must have a general rating of "A", and shall be a Class VI or higher in the financial size category as defined by Best's Key Rating Guide - Property and Casualty. Failure to submit the bid deposit shall constitute an informal Bid and such Bid shall be rejected.

The Bidder hereby agrees that the bid deposit shall be forfeited to the College as liquidated damages and not as penalty in the event Bidder fails to comply with the terms of this invitation to bid, or otherwise fails or refuses to honor the Bid upon award of the Contract by the College.

The bid deposit of all bidders will be returned, with the exception of the winning Contractor, after the College has awarded the Contract. The bid deposit of the Contractor will be returned after the Contract has been awarded and the Contractor has submitted all insurance documentation and the Performance and Payment Bond, as required by the Bid Documents.

***This project does not require a bid deposit.**

2.10 PERFORMANCE AND PAYMENT BOND

The successful Bidder shall furnish a Performance and Payment Bond in the full amount of the Contract. The Surety issuing the Performance and Payment Bond must have a general rating of "A" and shall be a Class V or higher in the financial size category as defined by Best's Key Rating Guide-Property and Casualty.

In the event that the Bidder fails to furnish the Performance and Payment Bond within fourteen (14) calendar days after service of the Notice of Award, the College may elect to retain Bidder's bid deposit as liquidated damages and not as a penalty and the Contract may be terminated. The parties agree that the sum of the bid deposit is a fair estimate of the amount of damages that the College will sustain due to the Bidder's failure to furnish the Performance and Payment Bond and the termination of the Contract.

END OF SECTION

3.0 BID SPECIFICATION

The Project consists of the full installation of basketball backstops, structure modifications, ceiling modifications, electrical, and all other modifications required for a fully function Installation.

See Exhibit A for Project Manual, details specifications and drawings.

The permitting agency (AHJ) for this project is the Village of Glen Ellyn, Glen Ellyn Illinois. The successful bidder, and all subcontractors/trades required by the AHJ, will need to be registered with the Village before the permit for the work can be obtained. Contractors have included the registration costs in their bid, and will insure all necessary parties are registered in a timely manner so as not to impede the issuance of the construction permit (all other permit fees for drawing reviews and inspections will be paid by the College of DuPage).

This project is prevailing wage. Successful bidder will provide company contact information for itself and all subcontractors prior to release of final payment in order for the College to comply with state survey information. (See Exhibit B)

Certified payrolls for each employee or subcontracted employee who has worked on the College campus are be required to accompany pay applications will be required prior to releasing payments.

The Contractor shall not commence work under this contract until all insurance required herein is obtained and approved by the Owner.

Successful bidder will execute unaltered the College's modified AIA A107 – 2007, Standard Form of Agreement Between Owner and Contractor for a Project of Limited Scope.

END OF SECTION

4.0 BID FORM

BID FORM FOR 2018-B0036 – PE Arena Gymnasium Basketball Backstop for College of DuPage

FIRM NAME, CONTACT NAME and PHONE NUMBER

_____

_____

_____

The below prices include all stipulations and requirements of Addenda No.____.

The below prices include $10,000 Owner allowance referenced in Division 01 21 00 of Project Manual in Exhibit A.

Proposes to furnish all labor, materials, equipment and services as required to satisfactorily complete all work described here in as required for the construction and completion of the project where bid below.

PE Arena Gymnasium Basketball Backstop for College of DuPage	
Base Bid	$

Submitted by : _____(printed)

Submitted by : _____(signed)

END OF SECTION

5.0 BUSINESS ENTERPRISE PROGRAM

STATE OF ILLINOIS
BUSINESS ENTERPRISE PROGRAM
MINORITIES, FEMALES, PERSONS WITH DISABILITY
PARTICIPATION AND UTILIZATION PLAN

The Business Enterprise for Minorities, Females and Persons with Disabilities Act (BEP) establishes a goal for community colleges contracting with businesses that have been certified as owned and controlled by persons who are minorities (MBE), female (FBE/ also referred to as WBE), or persons with disabilities (PDBE) (collectively, BEP certified vendor(s)). 30 ILCS 575

Contract Goal to be Achieved by Vendor: This solicitation includes an aspirational participation goal of 20% based on the availability of BEP certified vendors to perform or provide the anticipated services and/or supplies required by this solicitation.

The BEP participation goal is applicable to all bids or offers. In addition to the award criteria established for this solicitation, the College will award this contract to a Vendor that meets the goal or demonstrates good faith efforts to meet the goal. This goal is applicable to change orders and allowances within the scope of work provided by the BEP certified vendors. If Vendor is an MBE and FBE certified vendor, the entire goal is met and no subcontracting with a BEP certified vendors is required; however, **Vendor must submit a Utilization Plan indicating that the goal will be met by self-performance.**

Following are guidelines for Vendor's completion of the Utilization Plan. The Utilization Plan must demonstrate that Vendor has either: (1) met the entire contract goal; or (2) made good faith efforts towards meeting the goal.

At the time of bid or offer, Vendor, or Vendor's proposed Subcontractor, must be certified with the Illinois Department of Central Management Services as a BEP certified vendor**.**

Failure to complete a Utilization Plan or provide Good Faith Effort documentation shall render the bid or offer non-responsive; and subject to rejection and/or disqualification in the College's sole discretion.

1. If applicable where there is more than one prime vendor, the Utilization Plan should include an executed Joint Venture Agreement specifying the terms and conditions of the relationship between the parties and their relationship and responsibilities to the contract. The Joint Venture Agreement must clearly evidence that the BEP certified vendor will be responsible for a clearly defined portion of the work and that its responsibilities, risks, profits and contributions of capital, and personnel are proportionate to its ownership percentage. It must include specific details related to the parties' contributions of capital, personnel, and equipment and share of the costs of insurance and other items; the scopes to be performed by the BEP certified vendor under its supervision; and the commitment of management, supervisory personnel, and operative personnel employed by the BEP certified vendor to be dedicated to the performance of the contract. Established Joint Venture Agreements will only be credited toward BEP goal achievements for specific work performed by the BEP certified vendor. **Each party to the Joint Venture Agreement must execute the bid or offer prior to submission of the bid or offer to the College.**

2. An agreement between a vendor and a BEP certified vendor in which a BEP certified vendor promises not to provide subcontracting or pricing quotations to other vendors is prohibited. The College may

request additional information to demonstrate compliance. Vendor agrees to cooperate promptly with the College in submitting to interviews, allowing entry to places of business, providing further documentation, and to soliciting the cooperation of a proposed BEP certified vendor. Failure to cooperate by Vendor and BEP certified vendor may render the bidder or offeror non-responsive or not responsible. **The contract will not be awarded to Vendor unless Vendor's Utilization Plan is approved by the College.**

3. **BEP Certified Vendor Locator References:** Vendor may consult CMS' BEP Vendor Directory at www.sell2.illinois.gov/cms/business, as well as the directories of other certifying agencies, but firms **must be certified with CMS as BEP certified vendors at the time of bid or offer.**

4. **Vendor Assurance:** Vendor shall not discriminate on the basis of race, color, national origin, sexual orientation or sex in the performance of this contract. Failure by Vendor to carry out these requirements is a material breach of this contract, which may result in the termination of this contract or such other remedy, as the College deems appropriate. This assurance must be included in each subcontract that Vendor signs with a subcontractor or supplier.

5. **Calculating BEP Certified Vendor Participation:** The Utilization Plan documents work anticipated to be performed, or goods/equipment provided by all BEP certified vendors and paid for upon satisfactory completion/delivery. Only the value of payments made for the work actually performed by BEP certified vendors, by subcontractors or suppliers to such vendors, is counted toward the contract goal. Applicable guidelines for counting payments attributable to contract goals are summarized below:

5.1 The value of the work actually performed or goods/equipment provided by the BEP certified vendor shall be counted towards the goal. The entire amount of that portion of the contract that is performed by the BEP certified vendor, including supplies purchased or equipment leased by the BEP certified vendor shall be counted, except supplies purchased and equipment rented from the Prime Vendor submitting this bid or offer.

5.2 A vendor shall count the portion of the total dollar value of the BEP contract equal to the distinct, clearly defined portion of the work of the contract that the BEP certified vendor performs toward the goal. A vendor shall also count the dollar value of work subcontracted to other BEP certified vendor. Work performed by the non- BEP certified party shall not be counted toward the goal. **Work that a BEP certified vendor subcontracts to a non-BEP certified vendor will not count towards the goal.**

5.3 A Vendor shall count toward the goal 100% of its expenditures for materials and supplies required under the contract and obtained from a BEP certified vendor manufacturer, BEP certified regular dealer, or BEP certified supplier. A Vendor shall count toward the goal the following expenditures to BEP certified vendors that are not manufacturers, regular dealers, or suppliers:

5.3.1 The fees or commissions charged for providing a bona fide service, such as professional, technical, consultant or managerial services and assistance in the procurement of essential personnel, facilities, equipment, materials or supplies required for performance of the contract, provided that the fee or commission is determined by College to be reasonable and not excessive as compared with fees customarily allowed for similar services.

5.3.2 The fees charged for delivery of materials and supplies required by the contract (but not the cost of the materials and supplies themselves) when the hauler, trucker, or delivery service is not also the manufacturer or a supplier of the materials and supplies being procured, provided that the fee is determined by the College to be reasonable and not excessive as compared with fees customarily allowed for similar services. The BEP certified vendor's trucking firm must be responsible for the management and supervision of the entire trucking operation for which it is responsible on the contract, and must itself own and operate at least one fully licensed, insured and operational truck used on the contract.

5.3.3 The fees or commissions charged for providing any bonds or insurance specifically required for the performance of the contract, provided that the fee or commission is determined by the College to be reasonable and not excessive as compared with fees customarily allowed for similar services.

5.4 BEP certified vendors who are performing on contract as second tier subcontractors may be counted in meeting the established BEP goal for this contract as long as the Prime Vendor can provide documentation indicating the utilization of these vendors.

5.5 A Vendor shall count towards the goal only expenditures to firms that perform a commercially useful function in the work of the contract.

5.5.1 A firm is considered to perform a commercially useful function when it is responsible for execution of a distinct element of the work of a contract and carries out its responsibilities by actually performing, managing, and supervising the work involved. The BEP certified vendor must also be responsible, with respect to materials or supplies used on the contract, for negotiating price, determining quality and quantity, ordering the materials or supplies, and installing the materials (where applicable) and paying for the material or supplies. To determine whether a firm is performing a commercially useful function, the College shall evaluate the amount of work subcontracted, whether the amount the firm is to be paid under the contract is commensurate with the work it is actually performing and the credit claimed for its performance of the work, industry practices, and other relevant factors.

5.5.2 A BEP certified vendor does not perform a commercially useful function if its role is limited to that of an extra participant in a transaction or contract through which funds are passed through in order to obtain BEP certified vendor participation. In determining whether a BEP certified vendor is such an extra participant, the College shall examine similar transactions, particularly those in which BEP certified vendors do not participate, and industry practices.

5.6 A Vendor shall not count towards the goal expenditures that are not direct, necessary and related to the work of the contract. Only the amount of services or goods that are directly attributable to the performance of the contract shall be counted. Ineligible expenditures include general office overhead or other Vendor support activities.

6. **Good Faith Effort Procedures**: Vendor must submit Utilization Plans, subcontract documents, and/or Letters of Intent that meet or exceed the published goal. If Vendor cannot meet the stated goal, Vendor must document and explain within the Utilization Plan the good faith efforts it undertook to meet the goal. Utilization Plans are due at the time of and must be enclosed and sealed with the bid

or offer submission. Copies of subcontract documents and/or Letters of Intent shall be due upon request.

7. **Contract Compliance:** Compliance with this section is an essential part of the contract. The following administrative procedures and remedies govern Vendor's compliance with the contractual obligations established by the Utilization Plan. **After approval of the Plan and award of the contract, the Utilization Plan becomes part of the contract.** If Vendor did not succeed in obtaining BEP certified vendor participation to achieve the goal and the Utilization Plan was approved and contract awarded based upon a determination of good faith, the total dollar value of BEP certified vendor work calculated in the approved Utilization Plan as a percentage of the awarded contract value shall become the contract goal.

7.1. The Utilization Plan may not be amended after contract execution without the College's prior written approval.

7.2. **Vendor may not make changes to its contractual BEP certified vendor commitments or substitute BEP certified vendors without the prior written approval of the College**. Unauthorized changes or substitutions, including performing the work designated for a BEP certified vendor with Vendor's own forces, shall be a violation of the utilization plan and a breach of the contract, and shall be cause to terminate the contract, and/or seek other contract remedies or sanctions.

7.3. If it becomes necessary to substitute a BEP certified vendor or otherwise change the Utilization Plan, Vendor must notify the College in writing of the request to substitute a BEP certified vendor or otherwise change the Utilization Plan. The request must state specific reasons for the substitution or change. The College shall notify the Council or its delegate of the request to substitute a BEP certified vendor or change the Utilization Plan. The College reserves the right to approve or deny a request for substitution or other change in the Utilization Plan.

7.4. Where Vendor has established the basis for the substitution to the College's satisfaction, it must make good faith efforts to meet the contract goal by substituting a BEP certified vendor. Documentation of a replacement BEP certified vendor, or of good faith efforts to replace the BEP certified vendor, must meet the requirements of the initial Utilization Plan. If the goal cannot be reached and good faith efforts have been made, Vendor may substitute with a non- BEP certified vendor or Vendor may perform the work.

7.5. If a Vendor plans to hire a subcontractor for any scope of work that was not previously disclosed in the Utilization Plan, Vendor must obtain the approval of the College to modify the Utilization Plan and must make good faith efforts to ensure that BEP certified vendors have a fair opportunity to submit a bid or offer on the new scope of work.

7.6. A new BEP certified vendor agreement must be executed and submitted to the College within five business days of Vendor's receipt of the College's approval for the substitution or other change.

7.7. Vendor shall maintain a record of all relevant data with respect to the utilization of BEP certified vendors, including but without limitation, payroll records, invoices, canceled checks and books of account for a period of at least three years after the completion of the contract. Full access to these records shall be granted by Vendor upon 48 hours written demand by the College to any duly authorized representative thereof, or to any

municipal, state or federal authorities. The College shall have the right to obtain from Vendor any additional data reasonably related or necessary to verify any representations by Vendor. After the performance of the final item of work or delivery of material by the BEP certified vendor and final payment to the BEP certified vendor by Vendor, but not later than 30 calendar days after such payment, Vendor shall submit a statement confirming the final payment and the total payments made to the BEP certified vendor under the contract.

7.8. The College will periodically review Vendor's compliance with these provisions and the terms of its contract. Without limitation, Vendor's failure to comply with these provisions or its contractual commitments as contained in the Utilization Plan, failure to cooperate in providing information regarding its compliance with these provisions or its Utilization Plan, or provision of false or misleading information or statements concerning compliance, certification status or eligibility of the BEP certified vendor, good faith efforts or any other material fact or representation shall constitute a material breach of this contract and entitle the College to declare a default, terminate the contract, or exercise those remedies provided for in the contract or at law or in equity.

7.9. The College reserves the right to withhold payment to Vendor to enforce these provisions and Vendor's contractual commitments. Final payment shall not be made pursuant to the contract until Vendor submits sufficient documentation demonstrating compliance with its Utilization Plan.

UTILIZATION PLAN

The Utilization Plan and Letter of Intent must be sealed and submitted with Bid.

_____ (Vendor) submits the following Utilization Plan as part
Respondent Name

of our bid or offer in accordance with the requirements of the BEP Program Status and Participation section of the solicitation for **PE Arena Gymnasium Basketball Backstop for College of DuPage BID Number 2018-B0036**. We understand that all subcontractors must be certified with the CMS BEP Program at the time of submission of all bids and offers. **We understand that compliance with this section is an essential part of this contract and that the Utilization Plan will become a part of the contract, if awarded.**

Vendor submits the following statement:

- ☐ Vendor is a BEP certified firm and plans to fully meet the goal through self-performance.
- ☐ Vendor has identified BEP certified subcontractor(s) to fully meet the established goal and submits the attached executed Letter(s) of Intent; or
- ☐ Vendor has made good faith efforts towards meeting the entire goal as indicated on the attached Utilization Plan, or a portion of the goal, and hereby requests a waiver (complete checklist below).

Vendor's person responsible for compliance with this BEP goal:

Name: _____ Title: _____

Telephone: _____ Email: _____

DEMONSTRATION OF GOOD FAITH EFFORTS TO ACHIEVE GOAL AND REQUEST FOR WAIVER

If the BEP participation goal was not achieved, the vendor must provide documented evidence of good faith efforts to achieve the goal.

Below is a checklist of actions that will be used to evaluate a Vendor's Demonstration of Good Faith Efforts and Request for Waiver. **Please check the actions which you completed.** If any other efforts were made to obtain BEP participation in addition to the items listed below, attach a detailed description of such efforts. The College reserves the right to review and audit the results of the vendor's efforts as described below.

- ☐ Utilize the Sell2Illinois website: www2.illinois.gov/cms/business to identify BEP certified vendors within the respective commodity/service codes denoted above and at a minimum email all listed vendors and solicit quotes from all vendors who express an interest via follow-up emails or telephone calls.

- ☐ Solicit through all reasonable and available means (e.g., attendance at a vendor conference, advertising and/or written notices) the interest of BEP certified vendors that have the capability to perform the work of the contract. Vendor must solicit this interest within sufficient time to allow the BEP certified vendors to respond to the solicitation. Vendor must determine with certainty if the BEP certified vendors are interested by taking appropriate steps to follow up initial solicitations and encourage them to submit a bid or proposal. Vendor must provide interested BEP certified vendors with adequate information about the plans, specifications, and requirements of the contract in a timely manner to assist them in responding promptly to the solicitation.

- ☐ Select portions of the work to be performed by BEP certified vendors in order to increase the likelihood that the goal will be achieved. This includes, where appropriate, breaking out contract work items into economically feasible units to facilitate BEP certified vendor participation, even when Vendor might otherwise prefer to perform these work items with its own forces.

- ☐ Make a portion of the work available to BEP certified vendors and selecting those portions of the work or material needs consistent with their availability, so as to facilitate BEP certified vendor participation.

- ☐ Negotiate in good faith with interested BEP certified vendors. Evidence of such negotiation must include the names, addresses, email addresses, and telephone numbers of BEP certified vendors that were considered and an explanation as to why an agreement could not be reached.

- ☐ Thoroughly investigate the capabilities of BEP certified vendors and not reject them as unqualified without sound reasons.

- ☐ Make efforts to assist interested BEP certified vendors in obtaining lines of credit or insurance as required by the College.
- ☐ Make efforts to assist interested BEP certified vendors in obtaining necessary equipment, supplies, materials, or related assistance or services.

6.0 CERTIFICATIONS **Required**

IMPORTANT: All bidders are required to complete and sign this form. Completed form must be returned with bid no later than the advertised bid deadline. Failure to return this completed form may result in disqualification of bid.

THE UNDERSIGNED IS CAUTIONED TO CAREFULLY READ THESE CERTIFICATIONS PRIOR TO SIGNING THE SIGNATURE PAGE. SIGNING THE SIGNATURE PAGE SHALL CONSTITUTE A WARRANTY BY THE UNDERSIGNED THAT ALL THE STATEMENTS, CERTIFICATIONS AND INFORMATION SET FORTH WITHIN THESE CERTIFICATIONS ARE TRUE, COMPLETE AND CORRECT AS OF THE DATE THE SIGNATURE PAGE IS SIGNED. THE UNDERSIGNED IS NOTIFIED THAT IF THE COLLEGE LEARNS THAT ANY OF THE FOLLOWING CERTIFICATIONS WERE FALSELY MADE, THAT ANY CONTRACT ENTERED INTO WITH THE UNDERSIGNED SHALL BE SUBJECT TO TERMINATION.

A. Prevailing Wage Act. To the extent required by law, Contractor shall not pay less than the prevailing wage as established pursuant to an Act Regulating the Wages of Laborers, Mechanics, and Other Workman employed under Contract for Public Workers 820 ILCS 130/1 *et seq.* Our company certifies that it is eligible for bidding on public contracts and has complied with section 11a of the Prevailing Wage Act, 820 ILCS 130.01-12. **Yes**_____ **No** _____

B. Human Rights Act. To the extent required by law, Contractor shall abide by the Illinois Human Rights Act, 775 ILCS 10/0.01 *et seq.*

C. Drug Free Workplace. To the extent required by law, Contractor shall abide with the requirements of the Drug Free Workplace Act 30 ILCS 580.1 *et seq.*

D. Sexual Harassment Policy. Contractor represents by the signing of this agreement that it has a written sexual harassment policy that is in accordance with 775 ILCS 5/2-105 (A) (4).

E. Non-debarment. By executing this agreement Contractor certifies that it has not been debarred from public contracts in the State of Illinois for violating either 33E-3 or 33E-4 of the Public Contracts Act, 720 ILCS 5/33E-1 *et seq.*

F. Fair Employment Practice: Company is in compliance with all State and Federal laws regarding Fair Employment Practice as well as all rules and regulations**. Yes** _____ **No** _____

G. Our company has an Equal Employment Opportunity and Affirmative Action Program which complies with Executive Order 11246, the Vietnam Era Veterans' Readjustment Assistance Act of 1974, and the Rehabilitation Act of 1973.

Yes _____ **No** _____

H Our company certifies that it is eligible for bidding on public contracts and is not in violation of either paragraph 33E-3 or 33-E-4 of Public Act 86-150, 720ICLS 5 with regards to bid rigging/bid rotating. **Yes**_____ **No** _____

I When required by law, the bidder and all bidder's subcontractors must participate in applicable apprenticeship and training programs approved by and registered with the United States Department of Labor's Bureau of Apprenticeship and Training as required by Illinois Public Act 093-0642.

ADVICE

A. MINORITY/WOMAN-OWNED, DISADVANTAGED BUSINESS? YES_____ NO_____. If yes, please attach copy of certification and advise certification number and expiration date below:

Name of Certifying Entity: _____

Certification #: _____ Expiration Date: _____

B. STATE NEGOTIATED COOPERATIVE AGREEMENT: YES _____ NO _____ Contract No. _____

Signature

Respondent/Company Official: _____Date: _____

7.0 SIGNATURE PAGE **Required**

IMPORTANT: All bidders are required to complete and sign this form. Completed form must be returned with bid to purchasing@cod.edu no later than the advertised bid deadline. Failure to return this completed form may result in disqualification of bid.

Check One:

☐ **SOLE PROPRIETOR** ☐ **PARTNERSHIP** (and/or JOINT VENTURE) ☐ **LIMITED LIABILITY COMPANY**

☐ **CORPORATION**

The undersigned acknowledges receipt of a full set of Bid Documents and Addenda Numbers _____ (None unless indicated here). **All issued addenda must be signed and returned to the College as per the instructions in the addenda or bid will not be accepted.**

The undersigned makes the foregoing Bid subject to all of the terms and conditions of the Bid Documents. The undersigned certifies that all of the foregoing statements of the Vendor Certifications are true and correct. The undersigned warrants that all of the facts and information submitted by the undersigned in connection with this Bid are true and correct. Upon award and execution of this Contract by the College of DuPage Board of Trustees, the undersigned agrees that execution of this Bid shall stand as the undersigned's execution of this Contract.

BUSINESS NAME:_____

BUSINESS ADDRESS:_____

_____

BUSINESS TELEPHONE:_____ FAX NUMBER:_____

EMAIL ADDRESS:_____

CELLULAR TELEPHONE NUMBER:_____

FEIN/SSN:_____

AUTHORIZED SIGNATURE: _____

PRINT NAME: _____

TITLE: _____

DATE: _____

Subscribed to and sworn before me this

_____ Day of _____, 2018. My commission expires: _____

X_____ _____

Notary Public Signature Notary Seal

*** Attach hereto a partnership resolution or other document authorizing the individual signing this Signature Page to so sign on behalf of the Partnership.**

**** If the LLC is not registered in the State of Illinois, a copy of a current Certificate of Good Standing from the state of incorporation must be submitted with this Signature Page.**

***** Attach either a certified copy of the by-laws, articles, resolution or other authorization demonstrating such persons to sign the Signature Page on behalf of the LLC.**

***** If the corporation is not registered in the State of Illinois, a copy of the Certificate of Good Standing from the state of incorporation must be submitted with this Signature Page.**

******* In the event that this Signature Page is signed by any persons other than the President and Secretary, attach either a certified copy of the corporate by-laws, a resolution or other authorization by the corporation, authorizing such persons to sign the Signature Page on behalf of the corporation.**

8.0 CONFLICT OF INTEREST DISCLOSURE AND NON-COLLUSION FORM **Required**

IMPORTANT: All bidders are required to complete and sign this form. Completed form must be returned with bid no later than the advertised bid deadline. Failure to return this completed form may result in disqualification of bid.

BID #: _____ DATE: _____

CONFLICT OF INTEREST DISCLOSURE

College of DuPage (COD) reserves the right, at its sole discretion, to reject any and all bids, revise the submission timeline as described in the solicitation, and to discontinue at any time the submission process as described in the solicitation. College of DuPage is requiring that any and all relationships with the College, its Administrators, Trustees, Committee members, COD Foundation Trustees, or any other Employee of the College be disclosed in writing as a part of any bid submitted. Contact with any employee of the College of DuPage during the pre-award period, except as noted in the solicitation, is strictly forbidden and is considered sufficient grounds for dismissal from the Bid/RFP process.

VENDOR CONFLICT OF INTEREST DISCLOSURE

Define the relationship with any College of DuPage Administrator, Trustee, Employee, COD Foundation Board member, Committee member, or their immediate family member, with which your company or any of its owners, officers, Trustees, employees, or their immediate family, does business or is likely to do business with, or for which there is an opportunity to influence a related College decision; include the name and relationship to any immediate family member.

_____

_____

_____

_____

☐ Vendor certifies that there is no known conflict of interest with any COD Administrator, Employee, Trustee, Committee member, or COD Foundation Trustee, or their immediate family.

Vendor Printed Name: _____Title: _____

Signature: _____ Date: _____

NON-COLLUSION STATEMENT

The undersigned affirms that he/she is duly authorized to execute this contract and that this company, corporation, firm, partnership or individual has not prepared this bid in collusion with any other bidder, and that the contents of this bid as to prices, terms or conditions of said bid have not been Communicated by the undersigned nor by any employee or agent to any other person engaged in this type of business prior to the official opening of this bid.

Owners/Principal(s)

Company Name: _____ Name(s)/Title(s): _____

_____

Vendor Address: _____ City, State, Zip: _____

Phone Number: _____ Fax Number: _____

Email Address: _____

Signature

Bidder/Company Official: _____Date: _____

EXHIBIT A – PROJECT MANUAL SPECIFICATIONS AND DRAWINGS

Project Manual

ISSUE FOR BID

Project Number: 21805100

PE Arena Gymnasium Basketball Backstop Building: PE

For:

College of DuPage

Community College District #502

425 FAWELL BLVD. GLEN ELLYN, ILLINOIS 60137

Issue for Bid

February 5th, 2018

www.legat.com

Table of Contents

End of Table of Contents

162

SECTION 01 10 00
SUMMARY

PART 1 GENERAL

1.01 PROJECT

A. Project Name: College of DuPage Basketball Court Renovation - Backstops

B. Owner's Name: College of DuPage.

C. Architect's Name: Legat Architects.

D. The Project consists of the full installation of basketball backstops, structure modifications, ceiling modifications, electrical, and all other modifications required for a fully function installation..

1.02 CONTRACT DESCRIPTION

A. Contract Type: Single prime contract based upon a stipulated sum. Refer to the instructions to bidders and general information for contract type and conditions.

1.03 DESCRIPTION OF ALTERATIONS WORK

A. Removal of existing basketball backstops & associated systems in their entirety and replacement with all new components required for a fully-operating, warranted system.

B. Contractor shall remove and store the following prior to start of work, for later reinstallation by Contractor: metal slats.

1.04 WORK BY OWNER

A. Owner has/will contract with other contractors for work in the gymnasium/arena. Work includes replacement of gymnasium floor, basketball backstops installation, and other projects which may be in adjacent areas.

1.05 OWNER OCCUPANCY

A. Owner intends to continue to occupy adjacent portions of the existing building during the entire construction period.

B. Owner intends to begin other projects contracted separately (wood gymnasium floor replacement) immediately following the basketball backboard installation. Maintaining the completion dates identified is required to complete other projects to allow the gymnasium to be used for scheduled classes immediately following the flooring replacement.

C. Owner intends to occupy the Project upon Substantial Completion.

D. Cooperate with Owner to minimize conflict and to facilitate Owner's operations.

E. Schedule the Work to accommodate Owner occupancy.

1.06 CONTRACTOR USE OF SITE AND PREMISES

A. Construction Operations: Limited to areas noted on Drawings.

B. Arrange use of site and premises to allow:
   1. Owner occupancy at adjacent areas.
   2. Work by Others in adjacent areas.
   3. Work by Owner for other projects adjacent to work.

C. Contractor may use designated portions of the gymnasium for staging and materials. Floors to be protected from damage.

D. Provide access to and from site as required by law and by Owner:
   1. Emergency Building Exits During Construction: Keep all exits required by code open during construction period; provide temporary exit signs if exit routes are temporarily altered.
   2. Do not obstruct roadways, sidewalks, or other public ways without permit.

E. Utility Outages and Shutdown:
   1. Limit disruption of utility services to hours the building is unoccupied.

2. Do not disrupt or shut down life safety systems, including but not limited to fire sprinklers and fire alarm system, without 7 days notice to Owner and authorities having jurisdiction.
3. Prevent accidental disruption of utility services to other facilities.

1.07 WORK SEQUENCE / SCHEDULE

A. Anticipated Award by Owner - March Board meeting March 15. Notice to Proceed - by March 23, 2018

B. Preconstruction meeting - TBD

C. Contractor submission of complete shopdrawings/submittals for review by March 30, 2018. Review/return shopdrawings by April 6, 2018.

D. Basketball backstop start/completion date. May 21, 2018 thru July 6, 2018

E. Basketball backstop Substantial Completion Date - July 6, 2018

F. Wood Floor Replacement July 9, 2018 thru July 27, 2018

G. Wood Floor Replacement Substantial Completion Date - July 27, 2018

H. Owner contingency July 28 thru August 10, 2018

I. Owner use/Occupancy August 13, 2018

J. Final Closeout (completion of all work) August 27, 2018

K. Coordinate construction schedule and operations with Owner.

L. The owner has contracted with other parties for use of the arena and has scheduled internal activies for the arena starting in August. These activies/events cannot be moved to other venues. If in the event the contractor fails to complete their work scope by the designated substantial completion date, the contractor shall stop work or other planned activities to take place in the arena and reschedule work to be completed during 3rd shift during the fall semester or winter break. The schedule for access will be provided by the Owner. Contractor shall be solely responsible for all additional costs including, but not limited to: phasing, protection, cleaning, labor, materials, etc.

END OF SECTION

SECTION 01 20 00
PRICE AND PAYMENT PROCEDURES

PART 1 GENERAL

1.01 SECTION INCLUDES

A. Procedures for preparation and submittal of applications for progress payments.

B. Change procedures.

C. Procedures for preparation and submittal of application for final payment.

1.02 SCHEDULE OF VALUES

A. Use Schedule of Values Form: AIA G703, edition stipulated in the Agreement.

B. Electronic media printout including equivalent information will be considered in lieu of standard form specified; submit draft to Architect for approval.

C. Forms filled out by hand will not be accepted.

D. Submit Schedule of Values in duplicate within 15 days after date of Owner-Contractor Agreement.

E. Format: Utilize the Table of Contents of this Project Manual. Identify each line item with number and title of the specification section. Identify site mobilization.

F. Include in each line item, the amount of Allowances specified in this section. For unit cost Allowances, identify quantities taken from Contract Documents multiplied by the unit cost to achieve the total for the item.

G. List quantities of materials, cost by trade/division, GC OHP, Supervision,

1.03 APPLICATIONS FOR PROGRESS PAYMENTS

A. Payment Period: Monthly.

B. Use Form AIA G702 and Form AIA G703, edition stipulated in the Agreement.

C. Forms filled out by hand will not be accepted.

D. For each item, provide a column for listing each of the following:
   1. Item Number.
   2. Description of work.
   3. Scheduled Values.
   4. Previous Applications.
   5. Work in Place and Stored Materials under this Application.
   6. Authorized Change Orders.
   7. Total Completed and Stored to Date of Application.
   8. Balance to Finish.
   9. Retainage.

E. Execute certification by signature of authorized officer.

F. Use data from approved Schedule of Values. Provide dollar value in each column for each line item for portion of work performed and for stored products.

G. List each authorized Change Order as a separate line item, listing Change Order number and dollar amount as for an original item of work.

H. Submit one electronic and three hard-copies of each Application for Payment to the Owner for processing.

I. Include the following with the application:
   1. Transmittal letter as specified for submittals in Section 01 30 00.
   2. GC waiver of Liens.
   3. Prevailing wage forms per general conditions.
   4. Partial release of liens from major subcontractors and vendors trailing by one month.
   5. Affidavits attesting to off-site stored products. Photos, and insurance

J. When Architect requires substantiating information, submit data justifying dollar amounts in question. Provide one copy of data with cover letter for each copy of submittal. Show application number and date, and line item by number and description.

1.04 MODIFICATION PROCEDURES

A. For minor changes not involving an adjustment to the Contract Sum or Contract Time, owner or Architect will issue instructions directly to Contractor.

B. For other required changes,Owner or Architect will issue a document signed by Owner instructing Contractor to proceed with the change, for subsequent inclusion in a Change Order.
   1. The document will describe the required changes and will designate method of determining any change in Contract Sum or Contract Time.
   2. Promptly execute the change.

C. For changes for which advance pricing is desired, Architect will issue a document that includes a detailed description of a proposed change with supplementary or revised drawings and specifications, a change in Contract Time for executing the change with a stipulation of any overtime work required and the period of time during which the requested price will be considered valid. Contractor shall prepare and submit a fixed price quotation within 3 days.

D. Computation of Change in Contract Amount: As specified in the Agreement and Conditions of the Contract.

E. Substantiation of Costs: Provide full information required for evaluation.
   1. Provide the following data:
      a. Quantities of products, labor, and equipment.
      b. Taxes, insurance, and bonds.
      c. Overhead and profit.
      d. Justification for any change in Contract Time.
      e. Credit for deletions from Contract, similarly documented.

F. Execution of Change Orders: Architect will issue Change Orders for signatures of parties as provided in the Conditions of the Contract.

G. After execution of Change Order, promptly revise Schedule of Values and Application for Payment forms to record each authorized Change Order as a separate line item and adjust the Contract Sum.

H. Promptly enter changes in Project Record Documents.

1.05 APPLICATION FOR FINAL PAYMENT

A. Prepare Application for Final Payment as specified for progress payments, identifying total adjusted Contract Sum, previous payments, and sum remaining due.

B. Application for Final Payment will not be considered until the following have been accomplished:

END OF SECTION

SECTION 01 21 00
ALLOWANCES

PART 1 GENERAL

1.01 SECTION INCLUDES

A. Cash allowances.

B. Contingency allowance.

C. Payment and modification procedures relating to allowances.

1.02 RELATED REQUIREMENTS

A. Section 01 20 00 - Price and Payment Procedures: Additional payment and modification procedures.

1.03 CASH ALLOWANCES

A. Costs Included in Cash Allowances: Cost of product to Contractor or subcontractor, less applicable trade discounts.

B. Contractor Responsibilities:
   1. Assist Architect in selection of products, suppliers, and installers.
   2. Obtain proposals from suppliers and installers and offer recommendations.
   3. On notification of which products have been selected, execute purchase agreement with designated supplier and installer.

1.04 FLOOR PATCHING ALLOWANCE

A. Contractor to include an allowance to patch cracks and concrete spalling in concrete subfloor in base bid. Refer to section 03 54 00 Cast Underlayment for additional requirements,

1.05 OWNER CONTINGENCY ALLOWANCE

A. Contractor's costs for products, delivery, installation, labor, insurance, payroll, taxes, bonding, equipment rental, overhead and profit will be included in Change Orders authorizing expenditure of funds from this Contingency Allowance.

B. Funds will be drawn from the Contingency Allowance only by Change Order.

1.06 ALLOWANCES SCHEDULE

A. Include cash allowance of $10,000.00 in bid

PART 2 PRODUCTS - NOT USED

PART 3 EXECUTION - NOT USED

END OF SECTION

SECTION 01 30 00
ADMINISTRATIVE REQUIREMENTS

PART 1 GENERAL

1.01 SECTION INCLUDES

A. General administrative requirements.

B. Electronic document submittal service.

C. Preconstruction meeting.

D. Progress meetings.

E. Construction progress schedule.

F. Contractor's daily reports.

G. Coordination drawings.

H. Submittals for review, information, and project closeout.

I. Number of copies of submittals.

J. Requests for Interpretation (RFI) procedures.

K. Submittal procedures.

1.02 RELATED REQUIREMENTS

A. General conditions, A107 agreement and project information

B. Section 01 70 00 - Execution and Closeout Requirements: Additional coordination requirements.

1.03 GENERAL ADMINISTRATIVE REQUIREMENTS

A. Conform to requirements of Section 01 70 00 - Execution and Closeout Requirements for coordination of execution of administrative tasks with timing of construction activities.

B. Make the following types of submittals to Owner/Architect:
   1. Requests for Interpretation (RFI).
   2. Requests for substitution.
   3. Shop drawings, product data, and samples.
   4. Design data.
   5. Manufacturer's instructions and field reports.
   6. Applications for payment and change order requests.
   7. Progress schedules.
   8. Coordination drawings.
   9. Correction Punch List and Final Correction Punch List for Substantial Completion.
   10. Closeout submittals.

1.04 PROJECT COORDINATOR

A. Project Coordinator: Owner.

B. During construction, coordinate use of storage, site and facilities through the Project Coordinator.

C. Comply with Project Coordinator's procedures for intra-project communications; submittals, reports and records, schedules, coordination drawings, and recommendations; and resolution of ambiguities and conflicts.

D. Comply with instructions of the Project Coordinator for use of temporary utilities and construction facilities. Responsibility for providing temporary utilities and construction facilities is identified in Section 01 10 00 - Summary.

E. Coordinate field engineering and layout work under instructions of the Project Coordinator.

F. Make the following types of submittals to Architect through the Project Coordinator:
   1. Requests for Interpretation.

2. Requests for substitution.
3. Applications for payment and change order requests.
4. Progress schedules.

PART 2 PRODUCTS - NOT USED

PART 3 EXECUTION

3.01 ELECTRONIC DOCUMENT SUBMITTAL SERVICE

A. All documents transmitted for purposes of administration of the contract are to be in electronic (PDF, MS Word, or MS Excel) format, as appropriate to the document, and transmitted via an Internet-based submittal service that receives, logs and stores documents, provides electronic stamping and signatures, and notifies addressees via email.
   1. Besides submittals for review, information, and closeout, this procedure applies to Requests for Interpretation (RFIs), progress documentation, contract modification documents (e.g. supplementary instructions, change proposals, change orders), applications for payment, field reports and meeting minutes, Contractor's correction punchlist, and any other document any participant wishes to make part of the project record.
   2. Contractor and Architect are required to use this service.
   3. It is Contractor's responsibility to submit documents in allowable format.
   4. Subcontractors, suppliers, and Architect's consultants are to be permitted to use the service at no extra charge.
   5. Users of the service need an email address, internet access, and PDF review software that includes ability to mark up and apply electronic stamps (such as Adobe Acrobat, www.adobe.com, or Bluebeam PDF Revu, www.bluebeam.com), unless such software capability is provided by the service provider.
   6. Paper document transmittals will not be reviewed; emailed electronic documents will not be reviewed.
   7. All other specified submittal and document transmission procedures apply, except that electronic document requirements do not apply to samples or color selection charts.

B. Utilize email for electronic document distribution.

C. Project Closeout: Architect will determine when to terminate the service for the project and is responsible for obtaining archive copies of files for Owner.

3.02 PRECONSTRUCTION MEETING

A. Project Coordinator will schedule a meeting after Notice of Award.

B. Attendance Required:
   1. Owner.
   2. Contractor.

C. Agenda:
   1. Execution of Owner-Contractor Agreement.
   2. Submission of executed bonds and insurance certificates.
   3. Submission of list of subcontractors, list of products, schedule of values, and progress schedule.
   4. Designation of personnel representing the parties to Contract and Architect.
   5. Procedures and processing of field decisions, submittals, substitutions, applications for payments, proposal request, Change Orders, and Contract closeout procedures.
   6. Scheduling.

D. Contractor to Record minutes and distribute copies within two days after meeting to participants, with two copies to Architect, Owner, participants, and those affected by decisions made.

3.03 PROGRESS MEETINGS

A. Contractor will make arrangements for meetings, prepare agenda with copies for participants, preside at meetings. Owner/project coordinator to attend.

B. Attendance Required:
   1. Contractor.
   2. Owner.
   3. Contractor's superintendent.
   4. Major subcontractors.

C. Agenda:
   1. Review minutes of previous meetings.
   2. Review of work progress.
   3. Field observations, problems, and decisions.
   4. Identification of problems that impede, or will impede, planned progress.
   5. Review of submittals schedule and status of submittals.
   6. Maintenance of progress schedule.
   7. Corrective measures to regain projected schedules.
   8. Planned progress during succeeding work period.
   9. Maintenance of quality and work standards.
   10. Effect of proposed changes on progress schedule and coordination.
   11. Other business relating to work.

D. Record minutes and distribute copies within two days after meeting to participants, with two copies to Architect, Owner, participants, and those affected by decisions made.

3.04 CONSTRUCTION PROGRESS SCHEDULE

A. Within 10 days after date of the Agreement, submit preliminary schedule.

B. Within 10 days after review of preliminary schedule, submit draft of proposed complete schedule for review.
   1. Include written certification that major contractors have reviewed and accepted proposed schedule.

C. Within 10 days after joint review, submit complete schedule.

D. Submit updated schedule every 14 days.

3.05 COORDINATION DRAWINGS

3.06 REQUESTS FOR INTERPRETATION (RFI)

A. Definition: A request seeking one of the following:
   1. An interpretation, amplification, or clarification of some requirement of Contract Documents arising from inability to determine from them the exact material, process, or system to be installed; or when the elements of construction are required to occupy the same space (interference); or when an item of work is described differently at more than one place in the Contract Documents.
   2. A resolution to an issue which has arisen due to field conditions and affects design intent.

B. Whenever possible, request clarifications at the next appropriate project progress meeting, with response entered into meeting minutes, rendering unnecessary the issuance of a formal RFI.

C. Preparation: Prepare an RFI immediately upon discovery of a need for interpretation of the Contract Documents. Failure to submit a RFI in a timely manner is not a legitimate cause for claiming additional costs or delays in execution of the work.
   1. Prepare a separate RFI for each specific item.
      a. Review, coordinate, and comment on requests originating with subcontractors and/or materials suppliers.

D. Content: Include identifiers necessary for tracking the status of each RFI, and information necessary to provide an actionable response.

E. Attachments: Include sketches, coordination drawings, descriptions, photos, submittals, and other information necessary to substantiate the reason for the request.

F. RFI Log: Prepare and maintain a tabular log of RFIs for the duration of the project.
   1. Indicate current status of every RFI. Update log promptly and on a regular basis.

2. Note dates of when each request is made, and when a response is received.

G. Responses: Content of answered RFIs will not constitute in any manner a directive or authorization to perform extra work or delay the project. If in Contractor's belief it is likely to lead to a change to Contract Sum or Contract Time, promptly issue a notice to this effect, and follow up with an appropriate Change Order request to Owner.

3.07 SUBMITTALS FOR REVIEW

A. When the following are specified in individual sections, submit them for review:
   1. Product data.
   2. Shop drawings.
   3. Samples for selection.
   4. Samples for verification.

B. Submit to Architect for review for the limited purpose of checking for conformance with information given and the design concept expressed in the contract documents.

C. Samples will be reviewed for aesthetic, color, or finish selection.

D. After review, provide copies and distribute in accordance with SUBMITTAL PROCEDURES article below and for record documents purposes described in Section 01 78 00 - Closeout Submittals.

3.08 SUBMITTALS FOR INFORMATION

A. When the following are specified in individual sections, submit them for information:
   1. Design data.
   2. Certificates.
   3. Test reports.
   4. Inspection reports.
   5. Manufacturer's instructions.
   6. Manufacturer's field reports.
   7. Other types indicated.

B. Submit for Architect's knowledge as contract administrator or for Owner.

3.09 SUBMITTALS FOR PROJECT CLOSEOUT

A. Submit Correction Punch List for Substantial Completion.

B. Submit Final Correction Punch List for Substantial Completion.

C. When the following are specified in individual sections, submit them at project closeout in conformance to requirements of Section 01 78 00 - Closeout Submittals:
   1. Project record documents.
   2. Operation and maintenance data.
   3. Warranties.
   4. Bonds.
   5. Other types as indicated.

D. Submit for Owner's benefit during and after project completion.

3.10 NUMBER OF COPIES OF SUBMITTALS

A. Electronic Documents: Submit one electronic copy in PDF format; an electronically-marked up file will be returned. Create PDFs at native size and right-side up; illegible files will be rejected.

B. Samples: Submit the number specified in individual specification sections; one of which will be retained by Architect.
   1. After review, produce duplicates.
   2. Retained samples will not be returned to Contractor unless specifically so stated.

3.11 SUBMITTAL PROCEDURES

A. General Requirements:
   1. Use a separate transmittal for each item.

2. Apply Contractor's stamp, signed or initialed certifying that review, approval, verification of products required, field dimensions, adjacent construction work, and coordination of information is in accordance with the requirements of the work and Contract Documents.
3. Deliver each submittal on date noted in submittal schedule, unless an earlier date has been agreed to by all affected parties, and is of the benefit to the project.
   a. Send submittals in electronic format via email to Architect.
4. Schedule submittals to expedite the Project, and coordinate submission of related items. Refer to project summary 01 10 00 for schedule
5. When revised for resubmission, identify all changes made since previous submission.
6. Distribute reviewed submittals. Instruct parties to promptly report inability to comply with requirements.
7. Incomplete submittals will not be reviewed, unless they are partial submittals for distinct portion(s) of the work, and have received prior approval for their use.
8. Submittals not requested will not be recognized or processed.

B. Product Data Procedures:
   1. Submit only information required by individual specification sections.
   2. Collect required information into a single submittal.
   3. Do not submit (Material) Safety Data Sheets for materials or products.

C. Shop Drawing Procedures:
   1. Prepare accurate, drawn-to-scale, original shop drawing documentation by interpreting the Contract Documents and coordinating related work.
   2. Do not reproduce the Contract Documents to create shop drawings.
   3. Generic, non-project-specific information submitted as shop drawings do not meet the requirements for shop drawings.

D. Samples Procedures:
   1. Transmit related items together as single package.
   2. Identify each item to allow review for applicability in relation to shop drawings showing installation locations.

3.12 SUBMITTAL REVIEW

A. Submittals for Review: Architect will review each submittal, and approve, or take other appropriate action.

B. Submittals for Information: Architect will acknowledge receipt and review. See below for actions to be taken.

C. Architect's actions will be reflected by marking each returned submittal using virtual stamp on electronic submittals.

D. Architect's and his consultants' actions on items submitted for review:
   1. Authorizing purchasing, fabrication, delivery, and installation:
      a. "Approved", or language with same legal meaning.
      b. "Approved as Noted, Resubmission not required", or language with same legal meaning.
         1) At Contractor's option, submit corrected item, with review notations acknowledged and incorporated.
      c. "Approved as Noted, Resubmit for Record", or language with same legal meaning.
   2. Not Authorizing fabrication, delivery, and installation:
      a. "Revise and Resubmit".
         1) Resubmit revised item, with review notations acknowledged and incorporated.
         2) Non-responsive resubmittals may be rejected.
      b. "Rejected".
         1) Submit item complying with requirements of Contract Documents.

E. Architect's and his consultants' actions on items submitted for information:
   1. Items for which no action was taken:

a. "Received" - to notify the Contractor that the submittal has been received for record only.

2. Items for which action was taken:
   a. "Reviewed" - no further action is required from Contractor.

END OF SECTION

SECTION 01 40 00
QUALITY REQUIREMENTS

PART 1 GENERAL

1.01 SECTION INCLUDES

A. Submittals.

B. Quality assurance.

C. References and standards.

D. Testing and inspection agencies and services.

E. Control of installation.

F. Tolerances.

G. Manufacturers' field services.

H. Defect Assessment.

1.02 RELATED REQUIREMENTS

A. Section 01 30 00 - Administrative Requirements: Submittal procedures.

1.03 REFERENCES AND STANDARDS

A. For products and workmanship specified by reference to a document or documents not included in the Project Manual, also referred to as reference standards, comply with requirements of the standard, except when more rigid requirements are specified or are required by applicable codes.

B. Conform to reference standard of date of issue current on date of Contract Documents, except where a specific date is established by applicable code.

C. Obtain copies of standards where required by product specification sections.

D. Maintain copy at project site during submittals, planning, and progress of the specific work, until Substantial Completion.

E. Should specified reference standards conflict with Contract Documents, request clarification from Architect before proceeding.

F. Neither the contractual relationships, duties, or responsibilities of the parties in Contract nor those of Architect shall be altered from the Contract Documents by mention or inference otherwise in any reference document.

1.04 TESTING AND INSPECTION AGENCIES AND SERVICES

PART 2 PRODUCTS - NOT USED

PART 3 EXECUTION

3.01 CONTROL OF INSTALLATION

A. Monitor quality control over suppliers, manufacturers, products, services, site conditions, and workmanship, to produce Work of specified quality.

B. Comply with manufacturers' instructions, including each step in sequence.

C. Should manufacturers' instructions conflict with Contract Documents, request clarification from Architect before proceeding.

D. Comply with specified standards as minimum quality for the Work except where more stringent tolerances, codes, or specified requirements indicate higher standards or more precise workmanship.

E. Have Work performed by persons qualified to produce required and specified quality.

F. Verify that field measurements are as indicated on shop drawings or as instructed by the manufacturer.

G. Secure products in place with positive anchorage devices designed and sized to withstand stresses, vibration, physical distortion, and disfigurement.

3.02 TOLERANCES

A. Monitor fabrication and installation tolerance control of products to produce acceptable Work. Do not permit tolerances to accumulate.

B. Comply with manufacturers' tolerances. Should manufacturers' tolerances conflict with Contract Documents, request clarification from Architect before proceeding.

C. Adjust products to appropriate dimensions; position before securing products in place.

3.03 TESTING AND INSPECTION

A. Testing Agency Duties:
   1. Provide qualified personnel at site. Cooperate with Architect and Contractor in performance of services.
   2. Perform specified sampling and testing of products in accordance with specified standards.
   3. Ascertain compliance of materials and mixes with requirements of Contract Documents.
   4. Promptly notify Architect and Contractor of observed irregularities or non-conformance of Work or products.
   5. Perform additional tests and inspections required by Architect.
   6. Submit reports of all tests/inspections specified.

B. Limits on Testing/Inspection Agency Authority:
   1. Agency may not release, revoke, alter, or enlarge on requirements of Contract Documents.
   2. Agency may not approve or accept any portion of the Work.
   3. Agency may not assume any duties of Contractor.
   4. Agency has no authority to stop the Work.

C. Contractor Responsibilities:
   1. Deliver to agency at designated location, adequate samples of materials proposed to be used that require testing, along with proposed mix designs.
   2. Cooperate with laboratory personnel, and provide access to the Work and to manufacturers' facilities.
   3. Provide incidental labor and facilities:
      a. To provide access to Work to be tested/inspected.
      b. To obtain and handle samples at the site or at source of Products to be tested/inspected.
      c. To facilitate tests/inspections.
      d. To provide storage and curing of test samples.
   4. Notify Architect and laboratory 24 hours prior to expected time for operations requiring testing/inspection services.
   5. Employ services of an independent qualified testing laboratory and pay for additional samples, tests, and inspections required by Contractor beyond specified requirements.
   6. Arrange with Owner's agency and pay for additional samples, tests, and inspections required by Contractor beyond specified requirements.

D. Re-testing required because of non-conformance to specified requirements shall be performed by the same agency on instructions by Architect.

E. Re-testing required because of non-conformance to specified requirements shall be paid for by Contractor.

3.04 MANUFACTURERS' FIELD SERVICES

A. When specified in individual specification sections, require material or product suppliers or manufacturers to provide qualified staff personnel to observe site conditions, conditions of surfaces and installation, quality of workmanship, test, adjust and balance of equipment as applicable, and to initiate instructions when necessary.

B. Report observations and site decisions or instructions given to applicators or installers that are supplemental or contrary to manufacturers' written instructions.

3.05 DEFECT ASSESSMENT

A. Replace Work or portions of the Work not conforming to specified requirements.

END OF SECTION

SECTION 01 41 00
REGULATORY REQUIREMENTS

PART 1 GENERAL

1.01 SUMMARY OF REFERENCE STANDARDS

A. Regulatory requirements applicable to this project are the following:

B. ADA Standards - Americans with Disabilities Act (ADA) Standards for Accessible Design; 2010.

C. 29 CFR 1910 - Occupational Safety and Health Standards; current edition.

D. NFPA 101 - Life Safety Code; 2015.

E. ICC (IBC) - International Building Code; 2018.

F. NFPA 70 - National Electrical Code; Most Recent Edition Adopted by Authority Having Jurisdiction, Including All Applicable Amendments and Supplements.

G. NJCAA - National Junior College Athletic Association; 2018: njcaa.org.L

1.02 RELATED REQUIREMENTS

A. Section 01 40 00 - Quality Requirements.

B. Bid Information and General Conditions

1.03 QUALITY ASSURANCE

A. Designer Qualifications: Where delegated engineering design is to be performed under the construction contract provide the direct supervision of a Professional Engineer experienced in design of this type of work and licensed in the State in which the Project is located.

PART 2 PRODUCTS - NOT USED

PART 3 EXECUTION - NOT USED

END OF SECTION

SECTION 01 42 16
DEFINITIONS

PART 1 GENERAL

1.01 SUMMARY

A. This section supplements the definitions contained in the General Conditions.

B. Other definitions are included in individual specification sections.

1.02 DEFINITIONS

A. Furnish: To supply, deliver, unload, and inspect for damage.

B. Install: To unpack, assemble, erect, apply, place, finish, cure, protect, clean, start up, and make ready for use.

C. Product: Material, machinery, components, equipment, fixtures, and systems forming the work result. Not materials or equipment used for preparation, fabrication, conveying, or erection and not incorporated into the work result. Products may be new, never before used, or re-used materials or equipment.

D. Provide: To furnish and install.

E. Supply: Same as Furnish.

PART 2 PRODUCTS - NOT USED

PART 3 EXECUTION - NOT USED

END OF SECTION

SECTION 01 50 00
TEMPORARY FACILITIES AND CONTROLS

PART 1 GENERAL

1.01 SECTION INCLUDES

A. Temporary utilities.

B. Temporary telecommunications services.

C. Temporary sanitary facilities.

D. Temporary Controls: Barriers, enclosures, and fencing.

E. Vehicular access and parking.

F. Waste removal facilities and services.

1.02 RELATED REQUIREMENTS

A. General Conditions and Bid Information

1.03 TEMPORARY UTILITIES

A. Provide means for power as required to perform work. Existing facilities may be used, however contractor assumes responsibility for distribution and return to original conditon.

1.04 TELECOMMUNICATIONS SERVICES

A. Provide, maintain, and pay for telecommunications services required at time of project mobilization.

1.05 TEMPORARY SANITARY FACILITIES

A. Use of existing facilities is permitted.

B. Maintain daily in clean and sanitary condition.

C. At end of construction, return facilities to same or better condition as originally found.

1.06 BARRIERS

A. Provide barriers to prevent unauthorized entry to construction areas, to prevent access to areas that could be hazardous to workers or the public, to allow for owner's use of site and to protect existing facilities and adjacent properties from damage from construction operations and demolition.

B. Protect non-owned vehicular traffic, stored materials, site, and structures from damage.

1.07 INTERIOR ENCLOSURES

A. Provide temporary partitions as required to separate work areas from Owner-occupied areas, to prevent penetration of dust and moisture into Owner-occupied areas, and to prevent damage to existing materials and equipment.

B. Backstop contractor to provide reinforced polyethelene sheet materials from ceiling to floor at areas of work to control dust from migrating to adjacent areas or mechanical systems or above ceiling.. Maintain throughout construction. Protect all flooring with minimal 1/4" hardboard for demolition at all areas and surround areas which will receive foot traffic. Protect floors with heavier gauge material as required for lifts, welding, scaffolding, material storage, etc.

C. Flooring contractor to provide reinforced polyethelene sheet materials from ceiling to floor at areas of work to control dust or other owner approved systems to control dust from migrating into mechanical systems or onto other flooring. Maintain throughout construction. Protect all flooring with minimal 1/4" hardboard for demolition at all areas and surround areas which will receive foot traffic. Protect floors with heavier gauge material as required for lifts, equipment, welding, scaffolding, material storage, etc.

D. Clean floors and adjacent floors dailyof dust/debris to prevent damage to floors and exterior areas.

1.08 VENTILATION

A. Ventilate during application of odor-creating products and installations.

1.09 SECURITY

A. Provide security and facilities to protect Work, existing facilities, and Owner's operations from unauthorized entry, vandalism, or theft.

B. Coordinate with Owner's security program.

1.10 VEHICULAR ACCESS AND PARKING

A. Coordinate access and haul routes with governing authorities and Owner.

B. Provide and maintain access to fire hydrants, free of obstructions.

C. Provide means of removing mud from vehicle wheels before entering streets.

D. Existing parking areas may be used for construction parking. Coordinate location with Owner.

E. Do not allow vehicle parking on existing pavement laawns, sidewalks, etc. Contractor responsible for all costs for repair. .

1.11 WASTE REMOVAL

A. Provide waste removal facilities and services as required to maintain the site in clean and orderly condition.

B. Provide containers with lids. Remove trash from site daily. Dust/vacuum/sweep floors daily to remove debris, dust, etc.

C. If materials to be recycled or re-used on the project must be stored on-site, provide suitable non-combustible containers; locate containers holding flammable material outside the structure unless otherwise approved by the authorities having jurisdiction.

D. Do not allow demolition of material to fall from above onto floor. Damage to new or existing floors will be the responsibilty of the contractor.

1.12 REMOVAL OF UTILITIES, FACILITIES, AND CONTROLS

A. Remove temporary utilities, equipment, facilities, materials, prior to Date of Substantial Completion inspection.

B. Clean and repair damage caused by installation or use of temporary work.

C. Restore existing facilities used during construction to original condition.

D. Restore new permanent facilities used during construction to specified condition.

PART 2 PRODUCTS - NOT USED

PART 3 EXECUTION - NOT USED

END OF SECTION

SECTION 01 60 00
PRODUCT REQUIREMENTS

PART 1 GENERAL

1.01 SECTION INCLUDES

A. Re-use of existing products.

B. Transportation, handling, storage and protection.

C. Product option requirements.

D. Substitution limitations.

E. Maintenance materials, including extra materials, spare parts, tools, and software.

1.02 RELATED REQUIREMENTS

A. Section 01 10 00 - Summary: Lists of products to be removed from existing building.

1.03 REFERENCE STANDARDS

A. CAN/CSA Z809 - National Standard for Sustainable Forest Management; CSA International Inc; 2016.

B. NEMA MG 1 - Motors and Generators; 2016.

C. NFPA 70 - National Electrical Code; Most Recent Edition Adopted by Authority Having Jurisdiction, Including All Applicable Amendments and Supplements.

1.04 SUBMITTALS

A. Proposed Products List: Submit list of major products proposed for use, with name of manufacturer, trade name, and model number of each product.
   1. Submit within 5 days after date of Notice to Proceed.
   2. For products specified only by reference standards, list applicable reference standards.

B. Product Data Submittals: Submit manufacturer's standard published data. Mark each copy to identify applicable products, models, options, and other data. Supplement manufacturers' standard data to provide information specific to this Project.

C. Shop Drawing Submittals: Prepared specifically for this Project; indicate utility and electrical characteristics, utility connection requirements, and location of utility outlets for service for functional equipment and appliances.

D. Sample Submittals: Illustrate functional and aesthetic characteristics of the product, with integral parts and attachment devices. Coordinate sample submittals for interfacing work.
   1. For selection from standard finishes, submit samples of the full range of the manufacturer's standard colors, textures, and patterns.

1.05 QUALITY ASSURANCE

A. Sustainably Harvested Wood: Solid wood, wood chips, and wood fiber certified or labeled by an organization accredited by one of the following:
   1. American Forest Foundation, The American Tree Farm System; refer to http://www.treefarmsystem.org.
   2. Canadian Sustainable Forest Management System, under CAN/CSA Z809; refer to http://www.csasfmforests.ca.
   3. The Forest Stewardship Council, The Principles for Natural Forest Management; for Canada visit http://www.fsccanada.org, for the USA visit http://www.fscus.org.
   4. Sustainable Forestry Board, under The Sustainable Forestry Initiative® of the American Forest & Paper Association; refer to http://www.afandpa.org.
   5. Acceptable Evidence: Copies of invoices bearing the certifying organization's certification numbers.

PART 2 PRODUCTS

2.01 EXISTING PRODUCTS

A. Do not use materials and equipment removed from existing premises unless specifically required or permitted by the Contract Documents.

B. Specific Products to be Reused: The reuse of certain materials and equipment already existing on the project site is required.
   1. See drawings for list of items required to be salvaged for reuse and relocation.

2.02 NEW PRODUCTS

A. Provide new products unless specifically required or permitted by the Contract Documents.

B. DO NOT USE products having any of the following characteristics:
   1. Made of wood from newly cut old growth timber.
   2. Containing lead, cadmium, asbestos or any banned susbstance.

2.03 PRODUCT OPTIONS

A. Products Specified by Reference Standards or by Description Only: Use any product meeting those standards or description.

B. Products Specified by Naming One or More Manufacturers: Use a product of one of the manufacturers named and meeting specifications, no options or substitutions allowed.

C. Products Specified by Naming One or More Manufacturers with a Provision for Substitutions: Submit a request for substitution for any manufacturer not named.

2.04 MAINTENANCE MATERIALS

A. Furnish extra materials, spare parts, tools, and software of types and in quantities specified in individual specification sections.

B. Deliver to Project site; obtain receipt prior to final payment.

PART 3 EXECUTION

3.01 SUBSTITUTION LIMITATIONS

A. Refer to bidding information and general condition for substitutions. Any proposed substitution must be submitted to owner for review min 7 days prior to acceptance of bids. Approved substitution products will be issued as an addendum.

3.02 TRANSPORTATION AND HANDLING

A. Package products for shipment in manner to prevent damage; for equipment, package to avoid loss of factory calibration.

B. If special precautions are required, attach instructions prominently and legibly on outside of packaging.

C. Coordinate schedule of product delivery to designated prepared areas in order to minimize site storage time and potential damage to stored materials.

D. Transport and handle products in accordance with manufacturer's instructions.

E. Transport materials in covered trucks to prevent contamination of product and littering of surrounding areas.

F. Promptly inspect shipments to ensure that products comply with requirements, quantities are correct, and products are undamaged.

G. Provide equipment and personnel to handle products by methods to prevent soiling, disfigurement, or damage, and to minimize handling.

H. Arrange for the return of packing materials, such as wood pallets, where economically feasible.

3.03 STORAGE AND PROTECTION

A. Designate receiving/storage areas for incoming products so that they are delivered according to installation schedule and placed convenient to work area in order to minimize waste due to excessive materials handling and misapplication.

B. Store and protect products in accordance with manufacturers' instructions.

C. Store with seals and labels intact and legible.

D. Store sensitive products in weather tight, climate controlled, enclosures in an environment favorable to product.

E. For exterior storage of fabricated products, place on sloped supports above ground.

F. Protect products from damage or deterioration due to construction operations, weather, precipitation, humidity, temperature, sunlight and ultraviolet light, dirt, dust, and other contaminants.

G. Comply with manufacturer's warranty conditions, if any.

H. Cover products subject to deterioration with impervious sheet covering. Provide ventilation to prevent condensation and degradation of products.

I. Prevent contact with material that may cause corrosion, discoloration, or staining.

J. Provide equipment and personnel to store products by methods to prevent soiling, disfigurement, or damage.

K. Arrange storage of products to permit access for inspection. Periodically inspect to verify products are undamaged and are maintained in acceptable condition.

END OF SECTION

SECTION 01 70 00

EXECUTION AND CLOSEOUT REQUIREMENTS

PART 1 GENERAL

1.01 SECTION INCLUDES

A. Examination, preparation, and general installation procedures.

B. Requirements for alterations work, including selective demolition, except removal, disposal, and/or remediation of hazardous materials and toxic substances.

C. Cutting and patching.

D. Surveying for laying out the work.

E. Cleaning and protection.

F. Starting of systems and equipment.

G. Demonstration and instruction of Owner personnel.

H. Closeout procedures, including Contractor's Correction Punch List, except payment procedures.

1.02 RELATED REQUIREMENTS

A. Section 01 10 00 - Summary: Limitations on working in existing building; continued occupancy; work sequence; identification of salvaged and relocated materials.

B. Bid information and General conditions.

C. Section 01 30 00 - Administrative Requirements: Submittals procedures, Electronic document submittal service.

D. Section 01 40 00 - Quality Requirements: Testing and inspection procedures.

E. Section 01 50 00 - Temporary Facilities and Controls: Temporary interior partitions.

F. Section 02 41 00 - Demolition:

1.03 REFERENCE STANDARDS

A. NFPA 241 - Standard for Safeguarding Construction, Alteration, and Demolition Operations; 2013.

1.04 SUBMITTALS

A. See Section 01 30 00 - Administrative Requirements, for submittal procedures.

B. Survey work: Submit name, address, and telephone number of Engineer before starting survey work.
   1. On request, submit documentation verifying accuracy of survey work.
   2. Submit a copy of site drawing signed by the Engineer, that the elevations and locations of the work are in conformance with Contract Documents.
   3. Submit surveys and survey logs for the project record.
   4. Contractor responsible for surveying structure heights in relation to floors.
   5. Contractor responsible for flatness of exisitng floor and adjustments.

C. Cutting and Patching: Submit written request in advance of cutting or alteration that affects:
   1. Structural integrity of any element of Project.
   2. Efficiency, maintenance, or safety of any operational element.
   3. Visual qualities of sight exposed elements.
   4. Work of Owner or separate Contractor.

D. Project Record Documents: Accurately record actual locations of capped and active utilities.

1.05 QUALIFICATIONS

A. For field engineering and survey work, employ a professional engineer of the discipline required for specific service on Project, licensed in the State in which the Project is located.

1.06 PROJECT CONDITIONS

A. Ventilate enclosed areas to assist cure of materials, to dissipate humidity, and to prevent accumulation of dust, fumes, vapors, or gases.

B. Dust Control: Execute work by methods to minimize raising dust from construction operations. Provide positive means to prevent air-borne dust from dispersing into atmosphere and over adjacent property.
   1. Provide dust-proof enclosures to prevent entry of dust generated outdoors.
   2. Provide dust-proof barriers between construction areas and areas continuing to be occupied by Owner.

1.07 COORDINATION

A. Coordinate scheduling, submittals, and work of the various sections of the Project Manual to ensure efficient and orderly sequence of installation of interdependent construction elements, with provisions for accommodating items installed later.

B. Notify affected utility companies and comply with their requirements.

C. Verify that utility requirements and characteristics of new operating equipment are compatible with building utilities. Coordinate work of various sections having interdependent responsibilities for installing, connecting to, and placing in service, such equipment.

D. Coordinate space requirements, supports, and installation of mechanical and electrical work that are indicated diagrammatically on drawings. Follow routing indicated for pipes, ducts, and conduit, as closely as practicable; place runs parallel with lines of building. Utilize spaces efficiently to maximize accessibility for other installations, for maintenance, and for repairs.

E. In finished areas except as otherwise indicated, conceal pipes, ducts, and wiring within the construction. Coordinate locations of fixtures and outlets with finish elements.

F. Coordinate completion and clean-up of work of separate sections.

G. After Owner occupancy of premises, coordinate access to site for correction of defective work and work not in accordance with Contract Documents, to minimize disruption of Owner's activities.

PART 2 PRODUCTS

2.01 PATCHING MATERIALS

A. New Materials: As specified in product sections; match existing products and work for patching and extending work.

B. Type and Quality of Existing Products: Determine by inspecting and testing products where necessary, referring to existing work as a standard.

PART 3 EXECUTION

3.01 EXAMINATION

A. Verify that existing site conditions and substrate surfaces are acceptable for subsequent work. Start of work means acceptance of existing conditions.

B. Verify that existing substrate is capable of structural support or attachment of new work being applied or attached.

C. Examine and verify specific conditions described in individual specification sections.

D. Take field measurements before confirming product orders or beginning fabrication, to minimize waste due to over-ordering or misfabrication.

E. Verify that utility services are available, of the correct characteristics, and in the correct locations.

F. Prior to Cutting: Examine existing conditions prior to commencing work, including elements subject to damage or movement during cutting and patching. After uncovering existing work, assess conditions affecting performance of work. Beginning of cutting or patching means acceptance of existing conditions.

3.02 PREPARATION

A. Clean substrate surfaces prior to applying next material or substance.

B. Seal cracks or openings of substrate prior to applying next material or substance.

C. Apply manufacturer required or recommended substrate primer, sealer, or conditioner prior to applying any new material or substance in contact or bond.

3.03 LAYING OUT THE WORK

A. Verify locations of survey control points prior to starting work.

B. Promptly notify Architect of any discrepancies discovered.

C. Protect survey control points prior to starting site work; preserve permanent reference points during construction.

D. Promptly report to Architect the loss or destruction of any reference point or relocation required because of changes in grades or other reasons.

E. Replace dislocated survey control points based on original survey control. Make no changes without prior written notice to Architect.

F. Utilize recognized engineering survey practices.

G. Establish elevations, lines and levels. Locate and lay out by instrumentation and similar appropriate means:

H. Periodically verify layouts by same means.

I. Maintain a complete and accurate log of control and survey work as it progresses.

3.04 GENERAL INSTALLATION REQUIREMENTS

A. In addition to compliance with regulatory requirements, conduct construction operations in compliance with NFPA 241, including applicable recommendations in Appendix A.

B. Install products as specified in individual sections, in accordance with manufacturer's instructions and recommendations, and so as to avoid waste due to necessity for replacement.

C. Make vertical elements plumb and horizontal elements level, unless otherwise indicated.

D. Install equipment and fittings plumb and level, neatly aligned with adjacent vertical and horizontal lines, unless otherwise indicated.

E. Make consistent texture on surfaces, with seamless transitions, unless otherwise indicated.

F. Make neat transitions between different surfaces, maintaining texture and appearance.

3.05 ALTERATIONS

A. Drawings showing existing construction and utilities are based on casual field observation and existing record documents only.
   1. Verify that construction and utility arrangements are as indicated.
   2. Report discrepancies to Architect before disturbing existing installation.
   3. Beginning of alterations work constitutes acceptance of existing conditions.

B. Remove existing work as indicated and as required to accomplish new work.
   1. Remove rotted wood, corroded metals, and deteriorated masonry and concrete; replace with new construction specified.
   2. Remove items indicated on drawings.
   3. Relocate items indicated on drawings.
   4. Where new surface finishes are to be applied to existing work, perform removals, patch, and prepare existing surfaces as required to receive new finish; remove existing finish if necessary for successful application of new finish.
   5. Where new surface finishes are not specified or indicated, patch holes and damaged surfaces to match adjacent finished surfaces as closely as possible.

C. Services (Including but not limited to Electrical and Telecommunications): Remove, relocate, and extend existing systems to accommodate new construction.

1. Maintain existing active systems that are to remain in operation; maintain access to equipment and operational components; if necessary, modify installation to allow access or provide access panel.
2. Where existing systems or equipment are not active and Contract Documents require reactivation, put back into operational condition; repair supply, distribution, and equipment as required.
3. Where existing active systems serve occupied facilities but are to be replaced with new services, maintain existing systems in service until new systems are complete and ready for service.
   a. Disable existing systems only to make switchovers and connections; minimize duration of outages.
   b. Provide temporary connections as required to maintain existing systems in service.
4. Verify that abandoned services serve only abandoned facilities.
5. Remove abandoned pipe, ducts, conduits, and equipment, including those above accessible ceilings; remove back to source of supply where possible, otherwise cap stub and tag with identification; patch holes left by removal using materials specified for new construction.

D. Protect existing work to remain.
   1. Prevent movement of structure; provide shoring and bracing if necessary.
   2. Perform cutting to accomplish removals neatly and as specified for cutting new work.
   3. Repair adjacent construction and finishes damaged during removal work.

E. Adapt existing work to fit new work: Make as neat and smooth transition as possible.
   1. When existing finished surfaces are cut so that a smooth transition with new work is not possible, terminate existing surface along a straight line at a natural line of division and make recommendation to Architect.

F. Patching: Where the existing surface is not indicated to be refinished, patch to match the surface finish that existed prior to cutting. Where the surface is indicated to be refinished, patch so that the substrate is ready for the new finish.

G. Clean existing systems and equipment.

H. Remove demolition debris and abandoned items from alterations areas and dispose of off-site; do not burn or bury.

I. Comply with all other applicable requirements of this section.

3.06 CUTTING AND PATCHING

A. Whenever possible, execute the work by methods that avoid cutting or patching.

B. See Alterations article above for additional requirements.

C. Perform whatever cutting and patching is necessary to:
   1. Complete the work.
   2. Fit products together to integrate with other work.
   3. Provide openings for penetration of mechanical, electrical, and other services.
   4. Match work that has been cut to adjacent work.
   5. Repair areas adjacent to cuts to required condition.
   6. Repair new work damaged by subsequent work.
   7. Remove samples of installed work for testing when requested.
   8. Remove and replace defective and non-conforming work.

D. Execute work by methods that avoid damage to other work and that will provide appropriate surfaces to receive patching and finishing. In existing work, minimize damage and restore to original condition.

E. Cut rigid materials using masonry saw or core drill. Pneumatic tools not allowed without prior approval.

F. Restore work with new products in accordance with requirements of Contract Documents.

G. Fit work air tight to pipes, sleeves, ducts, conduit, and other penetrations through surfaces.

H. At penetrations of fire rated walls, partitions, ceiling, or floor construction, completely seal voids with fire rated material in accordance with Section 07 84 00, to full thickness of the penetrated element.

I. Patching:
   1. Finish patched surfaces to match finish that existed prior to patching. On continuous surfaces, refinish to nearest intersection or natural break. For an assembly, refinish entire unit.
   2. Match color, texture, and appearance.
   3. Repair patched surfaces that are damaged, lifted, discolored, or showing other imperfections due to patching work. If defects are due to condition of substrate, repair substrate prior to repairing finish.

3.07 PROGRESS CLEANING

A. Maintain areas free of waste materials, debris, and rubbish. Maintain site in a clean and orderly condition.

B. Remove debris and rubbish from pipe chases, plenums, attics, crawl spaces, and other closed or remote spaces, prior to enclosing the space.

C. Broom and vacuum clean interior areas prior to start of surface finishing, and continue cleaning to eliminate dust.

D. Collect and remove waste materials, debris, and trash/rubbish from site periodically and dispose off-site; do not burn or bury.

3.08 PROTECTION OF INSTALLED WORK

A. Protect installed work from damage by construction operations.

B. Provide special protection where specified in individual specification sections.

C. Provide temporary and removable protection for installed products. Control activity in immediate work area to prevent damage.

D. Provide protective coverings at walls, projections, jambs, sills, and soffits of openings.

E. Protect finished floors, stairs, and other surfaces from traffic, dirt, wear, damage, or movement of heavy objects, by protecting with durable sheet materials.

F. Prohibit traffic or storage upon surrounding floors. .

G. Prohibit traffic from landscaped areas.

H. Remove protective coverings when no longer needed; reuse or recycle coverings if possible.

3.09 SYSTEM STARTUP

A. Coordinate schedule for start-up of various equipment and systems.

B. Verify that each piece of equipment or system has been checked for proper lubrication, drive rotation, belt tension, control sequence, and for conditions that may cause damage.

C. Verify tests, meter readings, and specified electrical characteristics agree with those required by the equipment or system manufacturer.

D. Verify that wiring and support components for equipment are complete and tested.

E. Execute start-up under supervision of applicable Contractor personnel and manufacturer's representative in accordance with manufacturers' instructions.

F. Submit a written report that equipment or system has been properly installed and is functioning correctly.

3.10 DEMONSTRATION AND INSTRUCTION

A. Demonstrate start-up, operation, control, adjustment, trouble-shooting, servicing, maintenance, and shutdown of each item of equipment at scheduled time, at equipment location.

B. For equipment or systems requiring seasonal operation, perform demonstration for other season within six months.

C. Provide a qualified person who is knowledgeable about the Project to perform demonstration and instruction of owner personnel.

D. Utilize operation and maintenance manuals as basis for instruction. Review contents of manual with Owner's personnel in detail to explain all aspects of operation and maintenance.

E. Prepare and insert additional data in operations and maintenance manuals when need for additional data becomes apparent during instruction.

3.11 ADJUSTING

A. Adjust operating products and equipment to ensure smooth and unhindered operation.

B. Provide final adjustments to baskets after new floor is installed. Provide follow-up visists for testing/adjusting as recommended by Manufacturer.

C. Provide testing of basketball backboards for vibration. Adjust as recommended by manufacturer.

3.12 FINAL CLEANING

A. Use cleaning materials that are nonhazardous.

B. Remove all labels that are not permanent. Do not paint or otherwise cover fire test labels or nameplates on mechanical and electrical equipment.

C. Clean filters of operating equipment.

D. Vacuum and mop floors to a dust-free condition.

E. Clean site; sweep paved areas, rake clean landscaped surfaces.

F. Remove waste, surplus materials, trash/rubbish, and construction facilities from the site; dispose of in legal manner; do not burn or bury.

3.13 CLOSEOUT PROCEDURES

A. Make submittals that are required by governing or other authorities.

B. Accompany Project Coordinator on preliminary inspection to determine items to be listed for completion or correction in the Contractor's Correction Punch List for Contractor's Notice of Substantial Completion.

C. Notify Architect when work is considered ready for Architect's Substantial Completion inspection.

D. Submit written certification containing Contractor's Correction Punch List, that Contract Documents have been reviewed, work has been inspected, and that work is complete in accordance with Contract Documents and ready for Architect's Substantial Completion inspection.

E. Conduct Substantial Completion inspection and create Final Correction Punch List containing Architect's and Contractor's comprehensive list of items identified to be completed or corrected and submit to Architect.

F. Correct items of work listed in Final Correction Punch List and comply with requirements for access to Owner-occupied areas.

G. Notify Architect when work is considered finally complete and ready for Architect's Substantial Completion final inspection.

H. Complete items of work determined by Architect listed in executed Certificate of Substantial Completion.

END OF SECTION

SECTION 01 74 19

CONSTRUCTION WASTE MANAGEMENT AND DISPOSAL

PART 1 GENERAL

1.01 WASTE MANAGEMENT REQUIREMENTS

A. Owner requires that this project generate the least amount of trash and waste possible.

B. Employ processes that ensure the generation of as little waste as possible due to error, poor planning, breakage, mishandling, contamination, or other factors.

C. Minimize trash/waste disposal in landfills; reuse, salvage, or recycle as much waste as economically feasible.

D. Required Recycling, Salvage, and Reuse: The following may not be disposed of in landfills or by incineration:
   1. Aluminum and plastic beverage containers.
   2. Corrugated cardboard.
   3. Wood pallets.
   4. Metals, including packaging banding, metal studs, sheet metal, structural steel, piping, reinforcing bars, door frames, and other items made of steel, iron, galvanized steel, stainless steel, aluminum, copper, zinc, lead, brass, and bronze.
   5. Plastic buckets.
   6. Acoustical ceiling tile and panels.

E. Contractor shall submit periodic Waste Disposal Reports; all landfill disposal, incineration, recycling, salvage, and reuse must be reported regardless of to whom the cost or savings accrues; use the same units of measure on all reports.

F. Methods of trash/waste disposal that are not acceptable are:
   1. Burning on the project site.
   2. Burying on the project site.
   3. Dumping or burying on other property, public or private.
   4. Other illegal dumping or burying.

G. Regulatory Requirements: Contractor is responsible for knowing and complying with regulatory requirements, including but not limited to Federal, state and local requirements, pertaining to legal disposal of all construction and demolition waste materials.

1.02 RELATED REQUIREMENTS

A. Section 01 30 00 - Administrative Requirements: Additional requirements for project meetings, reports, submittal procedures, and project documentation.

B. Section 01 50 00 - Temporary Facilities and Controls: Additional requirements related to trash/waste collection and removal facilities and services.

C. Section 01 60 00 - Product Requirements: Waste prevention requirements related to delivery, storage, and handling.

D. Section 01 70 00 - Execution and Closeout Requirements: Trash/waste prevention procedures related to demolition, cutting and patching, installation, protection, and cleaning.

1.03 DEFINITIONS

A. Clean: Untreated and unpainted; not contaminated with oils, solvents, caulk, or the like.

B. Construction and Demolition Waste: Solid wastes typically including building materials, packaging, trash, debris, and rubble resulting from construction, remodeling, repair and demolition operations.

C. Hazardous: Exhibiting the characteristics of hazardous substances, i.e., ignitibility, corrosivity, toxicity or reactivity.

D. Nonhazardous: Exhibiting none of the characteristics of hazardous substances, i.e., ignitibility, corrosivity, toxicity, or reactivity.

E. Nontoxic: Neither immediately poisonous to humans nor poisonous after a long period of exposure.

F. Recyclable: The ability of a product or material to be recovered at the end of its life cycle and remanufactured into a new product for reuse by others.

G. Recycle: To remove a waste material from the project site to another site for remanufacture into a new product for reuse by others.

H. Recycling: The process of sorting, cleansing, treating and reconstituting solid waste and other discarded materials for the purpose of using the altered form. Recycling does not include burning, incinerating, or thermally destroying waste.

I. Return: To give back reusable items or unused products to vendors for credit.

J. Reuse: To reuse a construction waste material in some manner on the project site.

K. Salvage: To remove a waste material from the project site to another site for resale or reuse by others.

L. Sediment: Soil and other debris that has been eroded and transported by storm or well production run-off water.

M. Source Separation: The act of keeping different types of waste materials separate beginning from the first time they become waste.

N. Toxic: Poisonous to humans either immediately or after a long period of exposure.

O. Trash: Any product or material unable to be reused, returned, recycled, or salvaged.

P. Waste: Extra material or material that has reached the end of its useful life in its intended use. Waste includes salvageable, returnable, recyclable, and reusable material.

1.04 SUBMITTALS

A. See Section 01 30 00 - Administrative Requirements, for submittal procedures.

B. Waste Disposal Reports: Submit at specified intervals, with details of quantities of trash and waste, means of disposal or reuse, and costs; show both totals to date and since last report.
   1. Submit updated Report with each Application for Progress Payment; failure to submit Report will delay payment.
   2. Submit Report on a form acceptable to Owner.
   3. Landfill Disposal: Include the following information:
      a. Identification of material.
      b. Amount, in tons or cubic yards (cubic meters), of trash/waste material from the project disposed of in landfills.
      c. State the identity of landfills, total amount of tipping fees paid to landfill, and total disposal cost.
      d. Include manifests, weight tickets, receipts, and invoices as evidence of quantity and cost.
   4. Incinerator Disposal: Include the following information:
      a. Identification of material.
      b. Amount, in tons or cubic yards (cubic meters), of trash/waste material from the project delivered to incinerators.
      c. State the identity of incinerators, total amount of fees paid to incinerator, and total disposal cost.
      d. Include manifests, weight tickets, receipts, and invoices as evidence of quantity and cost.
   5. Recycled and Salvaged Materials: Include the following information for each:
      a. Identification of material, including those retrieved by installer for use on other projects.
      b. Amount, in tons or cubic yards (cubic meters), date removed from the project site, and receiving party.

c. Transportation cost, amount paid or received for the material, and the net total cost or savings of salvage or recycling each material.
d. Include manifests, weight tickets, receipts, and invoices as evidence of quantity and cost.
e. Certification by receiving party that materials will not be disposed of in landfills or by incineration.

6. Material Reused on Project: Include the following information for each:
   a. Identification of material and how it was used in the project.
   b. Amount, in tons or cubic yards (cubic meters).
   c. Include weight tickets as evidence of quantity.
7. Other Disposal Methods: Include information similar to that described above, as appropriate to disposal method.

PART 3 EXECUTION

2.01 WASTE MANAGEMENT PROCEDURES

A. See Section 01 30 00 for additional requirements for project meetings, reports, submittal procedures, and project documentation.

B. See Section 01 70 00 for trash/waste prevention procedures related to demolition, cutting and patching, installation, protection, and cleaning.

2.02 WASTE MANAGEMENT PLAN IMPLEMENTATION

A. Manager: Designate an on-site person or persons responsible for instructing workers and overseeing and documenting results of the Waste Management Plan.

B. Communication: Distribute copies of the Waste Management Plan to job site foreman, each subcontractor, Owner, and Architect.

C. Instruction: Provide on-site instruction of appropriate separation, handling, and recycling, salvage, reuse, and return methods to be used by all parties at the appropriate stages of the project.

D. Meetings: Discuss trash/waste management goals and issues at project meetings.
   1. Pre-bid meeting.
   2. Pre-construction meeting.
   3. Regular job-site meetings.

E. Facilities: Provide specific facilities for separation and storage of materials for recycling, salvage, reuse, return, and trash disposal, for use by all contractors and installers.
   1. Provide containers as required.
   2. Provide adequate space for pick-up and delivery and convenience to subcontractors.
   3. Keep recycling and trash/waste bin areas neat and clean and clearly marked in order to avoid contamination of materials.

F. Hazardous Wastes: Separate, store, and dispose of hazardous wastes according to applicable regulations.

G. Recycling: Separate, store, protect, and handle at the site identified recyclable waste products in order to prevent contamination of materials and to maximize recyclability of identified materials. Arrange for timely pickups from the site or deliveries to recycling facility in order to prevent contamination of recyclable materials.

H. Reuse of Materials On-Site: Set aside, sort, and protect separated products in preparation for reuse.

I. Salvage: Set aside, sort, and protect products to be salvaged for reuse off-site.

END OF SECTION

SECTION 01 78 00
CLOSEOUT SUBMITTALS

PART 1 GENERAL

1.01 SECTION INCLUDES

A. Project Record Documents.

B. Operation and Maintenance Data.

C. Warranties and bonds.

1.02 RELATED REQUIREMENTS

A. Section 01 30 00 - Administrative Requirements: Submittals procedures, shop drawings, product data, and samples.

B. Bid Information and General Conditions

C. Section 01 70 00 - Execution and Closeout Requirements: Contract closeout procedures.

D. Individual Product Sections: Specific requirements for operation and maintenance data.

E. Individual Product Sections: Warranties required for specific products or Work.

1.03 SUBMITTALS

A. Project Record Documents: Submit documents to Architect with claim for final Application for Payment.

B. Operation and Maintenance Data and Project Record Documents:
   1. Submit two copies of preliminary draft or proposed formats and outlines of contents before start of Work. Architect will review draft and return one copy with comments.
   2. Submit electronic version for review.
   3. For equipment, or component parts of equipment put into service during construction and operated by Owner, submit completed documents within ten days after acceptance.
   4. Submit one copy of completed documents 15 days prior to final inspection. This copy will be reviewed and returned after final inspection, with Architect comments. Revise content of all document sets as required prior to final submission.
   5. Submit two sets of revised final documents in final form within 10 days after final inspection.

C. Warranties and Bonds:
   1. For equipment or component parts of equipment put into service during construction with Owner's permission, submit documents within 10 days after acceptance.
   2. Make other submittals within 10 days after Date of Substantial Completion, prior to final Application for Payment.
   3. For items of Work for which acceptance is delayed beyond Date of Substantial Completion, submit within 10 days after acceptance, listing the date of acceptance as the beginning of the warranty period.

PART 3 EXECUTION

2.01 PROJECT RECORD DOCUMENTS

A. Maintain on site one set of the following record documents; record actual revisions to the Work:
   1. Drawings.
   2. Specifications.
   3. Addenda.
   4. Change Orders and other modifications to the Contract.
   5. Reviewed shop drawings, product data, and samples.
   6. Manufacturer's instruction for assembly, installation, and adjusting.

B. Ensure entries are complete and accurate, enabling future reference by Owner.

C. Store record documents separate from documents used for construction.

D. Record information concurrent with construction progress.

E. Specifications: Legibly mark and record at each product section description of actual products installed, including the following:
   1. Changes made by Addenda and modifications.

F. Record Drawings and Shop Drawings: Legibly mark each item to record actual construction including:
   1. Field changes of dimension and detail.
   2. Details not on original Contract drawings.
   3. Graphics, colors for gym floor markings

2.02 OPERATION AND MAINTENANCE DATA

A. Source Data: For each product or system, list names, addresses and telephone numbers of Subcontractors and suppliers, including local source of supplies and replacement parts.

B. Product Data: Mark each sheet to clearly identify specific products and component parts, and data applicable to installation. Delete inapplicable information.

C. Drawings: Supplement product data to illustrate relations of component parts of equipment and systems, to show control and flow diagrams. Do not use Project Record Documents as maintenance drawings.

D. Typed Text: As required to supplement product data. Provide logical sequence of instructions for each procedure, incorporating manufacturer's instructions.

2.03 OPERATION AND MAINTENANCE DATA FOR MATERIALS AND FINISHES

A. For Each Product, Applied Material, and Finish:

B. Instructions for Care and Maintenance: Manufacturer's recommendations for cleaning agents and methods, precautions against detrimental cleaning agents and methods, and recommended schedule for cleaning and maintenance.

C. Where additional instructions are required, beyond the manufacturer's standard printed instructions, have instructions prepared by personnel experienced in the operation and maintenance of the specific products.

2.04 OPERATION AND MAINTENANCE DATA FOR EQUIPMENT AND SYSTEMS

A. For Each Item of Equipment and Each System:
   1. Description of unit or system, and component parts.
   2. Identify function, normal operating characteristics, and limiting conditions.
   3. Include performance curves, with engineering data and tests.
   4. Complete nomenclature and model number of replaceable parts.

B. Where additional instructions are required, beyond the manufacturer's standard printed instructions, have instructions prepared by personnel experienced in the operation and maintenance of the specific products.

C. Include color coded wiring diagrams as installed.

D. Operating Procedures: Include start-up, break-in, and routine normal operating instructions and sequences. Include regulation, control, stopping, shut-down, and emergency instructions. Include summer, winter, and any special operating instructions.

E. Maintenance Requirements: Include routine procedures and guide for preventative maintenance and trouble shooting; disassembly, repair, and reassembly instructions; and alignment, adjusting, balancing, and checking instructions.

F. Provide servicing and lubrication schedule, and list of lubricants required.

G. Include manufacturer's printed operation and maintenance instructions.

H. Include sequence of operation by controls manufacturer.

I. Provide original manufacturer's parts list, illustrations, assembly drawings, and diagrams required for maintenance.

J. Provide control diagrams by controls manufacturer as installed.

K. Provide list of original manufacturer's spare parts, current prices, and recommended quantities to be maintained in storage.

L. Additional Requirements: As specified in individual product specification sections.

2.05 ASSEMBLY OF OPERATION AND MAINTENANCE MANUALS

A. Assemble operation and maintenance data into durable manuals for Owner's personnel use, with data arranged in the same sequence as, and identified by, the specification sections.

B. Where systems involve more than one specification section, provide separate tabbed divider for each system.

C. Binders: Commercial quality, 8-1/2 by 11 inch (216 by 280 mm) three D side ring binders with durable plastic covers; 2 inch (50 mm) maximum ring size. When multiple binders are used, correlate data into related consistent groupings.

D. Cover: Identify each binder with typed or printed title OPERATION AND MAINTENANCE INSTRUCTIONS; identify title of Project; identify subject matter of contents.

E. Project Directory: Title and address of Project; names, addresses, and telephone numbers of Architect, Consultants, Contractor and subcontractors, with names of responsible parties.

F. Tables of Contents: List every item separated by a divider, using the same identification as on the divider tab; where multiple volumes are required, include all volumes Tables of Contents in each volume, with the current volume clearly identified.

G. Dividers: Provide tabbed dividers for each separate product and system; identify the contents on the divider tab; immediately following the divider tab include a description of product and major component parts of equipment.

H. Text: Manufacturer's printed data, or typewritten data on 20 pound paper.

I. Drawings: Provide with reinforced punched binder tab. Bind in with text; fold larger drawings to size of text pages.

J. Arrangement of Contents: Organize each volume in parts as follows:
   1. Project Directory.
   2. Table of Contents, of all volumes, and of this volume.
   3. Warranties
   4. Operation and Maintenance Data: Arranged by system, then by product category.
      a. Source data.
      b. Product data, shop drawings, and other submittals.
      c. Operation and maintenance data.
      d. Field quality control data.
      e. Photocopies of warranties and bonds.

2.06 WARRANTIES AND BONDS

A. Obtain warranties and bonds, executed in duplicate by responsible Subcontractors, suppliers, and manufacturers, within 10 days after completion of the applicable item of work. Except for items put into use with Owner's permission, leave date of beginning of time of warranty until Date of Substantial completion is determined.

B. Verify that documents are in proper form, contain full information, and are notarized.

C. Co-execute submittals when required.

D. Retain warranties and bonds until time specified for submittal.

E. Include originals of each in operation and maintenance manuals, indexed separately on Table of Contents.

END OF SECTION

SECTION 09 21 16
GYPSUM BOARD ASSEMBLIES

PART 1 GENERAL

1.01 SECTION INCLUDES

A. Performance criteria for gypsum board assemblies.

B. Metal stud wall framing.

C. Gypsum wallboard.

D. Joint treatment and accessories.

1.02 REFERENCE STANDARDS

A. ASTM C475/C475M - Standard Specification for Joint Compound and Joint Tape for Finishing Gypsum Board; 2015.

B. ASTM C754 - Standard Specification for Installation of Steel Framing Members to Receive Screw-Attached Gypsum Panel Products; 2017.

C. ASTM C840 - Standard Specification for Application and Finishing of Gypsum Board; 2017a.

D. ASTM C954 - Standard Specification for Steel Drill Screws for the Application of Gypsum Panel Products or Metal Plaster Bases to Steel Studs From 0.033 in. (0.84 mm) to 0.112 in. (2.84 mm) in Thickness; 2015.

E. ASTM C1002 - Standard Specification for Steel Self-Piercing Tapping Screws for Application of Gypsum Panel Products or Metal Plaster Bases to Wood Studs or Steel Studs; 2016.

F. ASTM C1047 - Standard Specification for Accessories For Gypsum Wallboard and Gypsum Veneer Base; 2014a.

G. ASTM C1396/C1396M - Standard Specification for Gypsum Board; 2017.

H. GA-216 - Application and Finishing of Gypsum Panel Products; 2016.

1.03 SUBMITTALS

A. See Section 01 30 00 - Administrative Requirements, for submittal procedures.

B. Product Data: Provide data on metal framing, gypsum board, accessories, joint finishing system, and sizing of framing members.

1.04 QUALITY ASSURANCE

A. Installer Qualifications: Company specializing in performing gypsum board installation and finishing, with minimum 5 years of experience.

B. Copies of Documents at Site: Maintain at the project site a copy of each referenced document that prescribes execution requirements.

PART 2 PRODUCTS

2.01 GYPSUM BOARD ASSEMBLIES

A. Provide completed assemblies complying with ASTM C840 and GA-216.

2.02 METAL FRAMING MATERIALS

A. Manufacturers - Metal Framing, Connectors, and Accessories:
   1. Clarkwestern Dietrich Building Systems LLC: www.clarkdietrich.com.
   2. Jaimes Industries: www.jaimesind.com/#sle.
   3. Marino: www.marinoware.com.
   4. Phillips Manufacturing Co: www.phillipsmfg.com/#sle.

B. Non-Loadbearing Framing System Components: ASTM C645; galvanized sheet steel, of size and properties necessary to comply with ASTM C754 for the spacing indicated, with maximum deflection of wall framing of L/120 at 5 psf (L/120 at 240 Pa).
   1. Studs: "C" shaped with flat or formed webs with knurled faces.
   2. Runners: U shaped, sized to match studs.

3. Ceiling Channels: C-shaped.
4. Minimum thickness: 20 ga.

C. Ceiling Hangers: Type and size as specified in ASTM C754 for spacing required.

2.03 BOARD MATERIALS

A. Manufacturers - Gypsum-Based Board:
1. American Gypsum Company: www.americangypsum.com.
2. CertainTeed Corporation: www.certainteed.com.
3. Continental Building Products: www.continental-bp.com/#sle.
4. Georgia-Pacific Gypsum: www.gpgypsum.com.
5. National Gypsum Company: www.nationalgypsum.com/#sle.
6. PABCO Gypsum: www.pabcogypsum.com.
7. USG Corporation: www.usg.com.

B. Gypsum Wallboard: Paper-faced gypsum panels as defined in ASTM C1396/C1396M; sizes to minimize joints in place; ends square cut.
1. Application: Use for vertical surfaces and ceilings, unless otherwise indicated.
2. Thickness:
a. Vertical Surfaces: 1/2 inch (13 mm).
b. Ceilings: 1/2 inch (13 mm).
3. Mold Resistance: 10.

2.04 ACCESSORIES

A. Beads, Joint Accessories, and Other Trim: ASTM C1047, rigid plastic, galvanized steel, or rolled zinc, unless noted otherwise.

B. Joint Materials: ASTM C475/C475M and as recommended by gypsum board manufacturer for project conditions.
1. Tape: 2 inch (50 mm) wide, coated glass fiber tape for joints and corners, except as otherwise indicated.

C. Screws for Fastening of Gypsum Panel Products to Cold-Formed Steel Studs Less than 0.033 inch (0.84 mm) in Thickness and Wood Members: ASTM C1002; self-piercing tapping screws, corrosion resistant.

D. Screws for Fastening of Gypsum Panel Products to Steel Members from 0.033 to 0.112 inch (0.84 to 2.84 mm) in Thickness: ASTM C954; steel drill screws, corrosion resistant.

PART 3 EXECUTION

3.01 FRAMING INSTALLATION

A. Metal Framing: Install in accordance with ASTM C754 and manufacturer's instructions.

B. Suspended Ceilings and Soffits: Space framing and furring members at 12 inches (300 mm) on center.
1. Laterally brace entire suspension system.

C. Studs: Space studs at 16 inches on center (at 406 mm on center).

3.02 BOARD INSTALLATION

A. Comply with ASTM C840, GA-216, and manufacturer's instructions. Install to minimize butt end joints, especially in highly visible locations.

3.03 JOINT TREATMENT

A. Finish gypsum board in accordance with levels defined in ASTM C840, as follows:
1. Level 4: Walls and ceilings to receive paint finish or wall coverings, unless otherwise indicated.

B. Tape, fill, and sand exposed joints, edges, and corners to produce smooth surface ready to receive finishes.

END OF SECTION

SECTION 09 91 23
INTERIOR PAINTING

PART 1 GENERAL

1.01 SECTION INCLUDES

A. Surface preparation.

B. Field application of paints.

C. Scope: Finish interior surfaces exposed to view, unless fully factory-finished and unless otherwise indicated.
   1. Mechanical and Electrical:
      a. In finished areas, paint exposed structure, insulated and exposed pipes, conduit, boxes, insulated and exposed ducts, hangers, brackets, collars and supports, mechanical equipment, and electrical equipment, unless otherwise indicated.

D. Do Not Paint or Finish the Following Items:
   1. Items factory-finished unless otherwise indicated; materials and products having factory-applied primers are not considered factory finished.
   2. Items indicated to remain unfinished.
   3. Fire rating labels, equipment serial number and capacity labels, bar code labels, and operating parts of equipment.
   4. Concealed pipes, ducts, and conduits.

1.02 RELATED REQUIREMENTS

A. Section 09 21 16 - Gypsum Board Assemblies.

1.03 REFERENCE STANDARDS

A. ASTM D16 - Standard Terminology for Paint, Related Coatings, Materials, and Applications; 2016.

B. MPI (APSM) - Master Painters Institute Architectural Painting Specification Manual; Current Edition, www.paintinfo.com.

1.04 SUBMITTALS

A. See Section 01 30 00 - Administrative Requirements, for submittal procedures.

B. Product Data: Provide complete list of products to be used, with the following information for each:
   1. Manufacturer's name, product name and/or catalog number, and general product category (e.g. "alkyd enamel").
   2. MPI product number (e.g. MPI #47).
   3. Cross-reference to specified paint system(s) product is to be used in; include description of each system.

C. Samples: Draw downs.ll

1.05 QUALITY ASSURANCE

A. Manufacturer Qualifications: Company specializing in manufacturing the products specified, with minimum three years documented experience.

B. Applicator Qualifications: Company specializing in performing the type of work specified with minimum 3 years experience and approved by manufacturer.

PART 2 PRODUCTS

2.01 MANUFACTURERS

A. Provide paints and finishes used in any individual system from the same manufacturer; no exceptions.

B. Paints:
   1. PPG Paints: www.ppgpaints.com/sle.

2. Sherwin-Williams Company: www.sherwin-williams.com.
3. Valspar Corporation: www.valsparpaint.com.

C. Substitutions: See Section 01 60 00 - Product Requirements.

2.02 PAINTS AND FINISHES - GENERAL

A. Paints and Finishes: Ready mixed, unless intended to be a field-catalyzed paint.
1. Provide paints and finishes of a soft paste consistency, capable of being readily and uniformly dispersed to a homogeneous coating, with good flow and brushing properties, and capable of drying or curing free of streaks or sags.
2. Supply each paint material in quantity required to complete entire project's work from a single production run.
3. Do not reduce, thin, or dilute paint or finishes or add materials unless such procedure is specifically described in manufacturer's product instructions.

2.03 PAINT SYSTEMS - INTERIOR

A. Interior Surfaces to be Painted, Unless Otherwise Indicated: Including gypsum board and shop primed steel.
1. Two top coats and one coat primer.
2. Top Coat(s): Institutional Low Odor/VOC Interior Latex; MPI #143, 144, 145, 146, 147, or 148.
a. Products:
1) PPG Paints Pure Performance Interior Latex, 9-300XI Series, Eggshell. (MPI #144)
2) Pratt & Lambert RedSeal Supreme Interior, Eggshell.
3) Sherwin-Williams Harmony Interior Acrylic Latex, Eg-Shel. (MPI #144)
4) Valspar Professional Interior Latex, No. 11800 Series, Eggshell.
5) Valspar Ultra 2000 Interior Latex, No. 30919, Eggshell.

B. Paint I-OP-DF - Dry Fall: Metals; exposed structure and overhead-mounted services, including shop primed structural steel, metal fabrications, galvanized ducts, galvanized conduit, and galvanized piping.
1. Top Coat: Latex Dry Fall; MPI #118, 155, or 226.
a. Products:
1) PPG Paints Speedhide Super Tech Water Based Interior Dry-Fog, 6-725XI, Flat. (MPI #118)
2) Rodda Latex Dryfall Flat, 05138. (MPI #118)
3) Sherwin-Williams Waterborne Acrylic Dryfall, Flat. (MPI #118)
4) Valspar Professional Interior Latex Dry Fall, No.275 Series, Flat. (MPI# 118)
5) Substitutions: Section 01 60 00 - Product Requirements.
2. Primer: As recommended by top coat manufacturer for specific substrate.

2.04 PRIMERS

A. Primers: Provide the following unless other primer is required or recommended by manufacturer of top coats.
1. Interior Institutional Low Odor/VOC Primer Sealer; MPI #149.

2.05 ACCESSORY MATERIALS

A. Accessory Materials: Provide primers, sealers, cleaning agents, cleaning cloths, sanding materials, and clean-up materials as required for final completion of painted surfaces.

B. Patching Material: Latex filler.

C. Fastener Head Cover Material: Latex filler.

PART 3 EXECUTION

3.01 EXAMINATION

A. Verify that surfaces are ready to receive work as instructed by the product manufacturer.

B. Examine surfaces scheduled to be finished prior to commencement of work. Report any condition that may potentially effect proper application.

C. Test shop-applied primer for compatibility with subsequent cover materials.

D. Measure moisture content of surfaces using an electronic moisture meter. Do not apply finishes unless moisture content of surfaces are below the following maximums:
   1. Gypsum Wallboard: 12 percent.

3.02 PREPARATION

A. Protect surfaces, floors, backstops, etc. which do not receive field paint.

B. Clean surfaces thoroughly and correct defects prior to application.

C. Prepare surfaces using the methods recommended by the manufacturer for achieving the best result for the substrate under the project conditions.

D. Remove or mask surface appurtenances, including electrical plates, hardware, light fixture trim, escutcheons, and fittings, prior to preparing surfaces or finishing.

E. Seal surfaces that might cause bleed through or staining of topcoat.

F. Gypsum Board: Fill minor defects with filler compound. Spot prime defects after repair.

G. Galvanized Surfaces:

H. Ferrous Metal:
   1. Solvent clean according to SSPC-SP 1.
   2. Shop-Primed Surfaces: Sand and scrape to remove loose primer and rust. Feather edges to make touch-up patches inconspicuous. Clean surfaces with solvent. Prime bare steel surfaces. Re-prime entire shop-primed item.
   3. Remove rust, loose mill scale, and other foreign substances using using methods recommended in writing by paint manufacturer and blast cleaning according to SSPC-SP 6 "Commercial Blast Cleaning". Protect from corrosion until coated.

3.03 APPLICATION

A. Provide proper ventilation.

B. Remove unfinished louvers, grilles, covers, and access panels on mechanical and electrical components and paint separately.

C. Apply products in accordance with manufacturer's written instructions and recommendations in "MPI Architectural Painting Specification Manual".

D. Do not apply finishes to surfaces that are not dry. Allow applied coats to dry before next coat is applied.

E. Apply each coat to uniform appearance in thicknesses specified by manufacturer.

F. Vacuum clean surfaces of loose particles. Use tack cloth to remove dust and particles just prior to applying next coat.

G. Reinstall metal ceiling slats removed prior to finishing.

3.04 PROTECTION

A. Touch-up damaged finishes after Substantial Completion.

END OF SECTION

SECTION 11 66 23
GYMNASIUM EQUIPMENT

PART 1 GENERAL

1.01 SECTION INCLUDES

A. Motorized basketball backstops, goals, and support framing.

1.02 RELATED REQUIREMENTS

A. Section 26 05 83 - Wiring Connections.

1.03 REFERENCE STANDARDS

A. AWS D1.1/D1.1M - Structural Welding Code - Steel; 2015, with Errata (2016).

B. NFPA 70 - National Electrical Code; Most Recent Edition Adopted by Authority Having Jurisdiction, Including All Applicable Amendments and Supplements.

1.04 ADMINISTRATIVE REQUIREMENTS

A. Large Components: Ensure that large components can be moved into final position without damage to other construction.

B. Electrically Operated Equipment: Coordinate location and electrical characteristics of service connection.

1.05 SUBMITTALS

A. See Section 01 30 00 - Administrative Requirements, for submittal procedures.

B. Product Data: Provide manufacturer's data showing configuration, sizes, materials, finishes, hardware, and accessories; include:
   1. Electrical characteristics and connection locations.
   2. Structural steel welder certifications.
   3. Manufacturer's installation instructions.

C. Shop Drawings: For custom fabricated equipment indicate, in large scale detail, existing conditions; construction methods; method of attachment or installation; type and gage of metal, hardware, and fittings; plan front elevation; elevations and dimensions; minimum one cross section; utility requirements as to types, sizes, and locations. Structural engineer to stamp calculations and shop drawings of framing design. Include calculations for vibration.

D. Erection Drawings: Detailed dimensional requirements for proper location of equipment.

E. Operating and maintenance data, for each operating equipment item.

F. Warranty: Submit manufacturer warranty and ensure that forms have been completed in Owner's name and registered with manufacturer.

1.06 QUALITY ASSURANCE

A. Manufacturer Qualifications: Company specializing in manufacturing products specified in this section, with not less than three years of documented experience.

B. Installer Qualifications: Company specializing in performing work of the type specified with minimum 3 years of experience.

1.07 DELIVERY, STORAGE, AND HANDLING

A. Deliver products to project site in manufacturer's original packaging with factory original labels attached.

B. Store products indoors and elevated above floor; prevent warping, twisting, or sagging.

C. Store products in accordance with manufacturer's instructions; protect from extremes of weather, temperature, moisture, and other damage.

1.08 WARRANTY

A. See Section 01 78 00 - Closeout Submittals, for additional warranty requirements.

B. Provide 5 year manufacturer warranty for motors and operation system.

PART 2 PRODUCTS

2.01 MANUFACTURERS

A. Gymnasium Equipment:
   1. Backstops: Gared Sports or architect-approved equal: www.garedsports.com.
   2. Shot/Game Clocks: OES or architect-approved equal: www.oes-scoreboards.com.
   3. Substitutions: See Section 01 60 00 - Product Requirements.

2.02 GENERAL REQUIREMENTS

A. See drawings for sizes and locations, unless noted otherwise.

B. Where mounting dimensions or sizes are not indicated, comply with applicable requirements of the following:
   1. National Junior College Athletic Association (NJCAA).

C. Provide mounting plates, brackets, and anchors of sufficient size and strength to securely attach equipment to building structure; comply with requirements of contract documents.

D. Hardware: Heavy duty steel hardware, as recommended by manufacturer.

E. Electrical Wiring and Components: Comply with NFPA 70; provide UL-listed equipment.

F. Structural Steel Fabrications: Welded in accordance with AWS D1.1/D1.1M, using certified welders.

2.03 BASKETBALL

A. Basketball System: Backstop assembly, backboard, and goal.
   1. Product: 3107 manufactured by Gared Sports.

B. Ceiling-Suspended Backstop Assemblies: Capable of mounting both rectangular backboards.
   1. Framing: Center strut; forward folding framing.
   2. Folding Control System: Electric hoist that folds backstop with 120 volt actuator, integral limit switches that provide automatic shut-off in both positions, and safety catch with automatic reset.
   3. Height Adjuster: Raises or lowers assembly by 3" to adjust goal height.
      a. Height Control System: Electric hoist that adjusts backstop with 120 volt actuator, and integral limit switches that provide automatic shut-off in both positions.
   4. Framing Color: black.

C. Backboards: Tempered glass, rectangular shaped.
   1. Frame: Brushed aluminum edge, steel mounting.
   2. Dimensions: 42 inches (1066.8 mm) high by 72 inches (1828.8 mm) wide
   3. Markings: Painted.
   4. Provide safety padding for bottom edge of backboard - "College of DuPage Chaparrals" green.
   5. Provide mounting kit.
   6. Provide shot/game clock mounting kit.

D. Break-away Goals: Steel rim, mounted to backboard, with attached nylon net; complete with mounting hardware.
   1. Net Attachment Device: Tube-tie.
   2. Finish: Powder coat orange.

E. Shot/Game clocks: mounted to backboard, wireless connection to existing scoreboard.
   1. Product: LED Shot Clock with Game Time manufactured by OES or architect-approved equal.
   2. Shot clock digit color: red
   3. Game time digit color: white

F. Keyed Control Panel: Refer to drawings for location.

PART 3 EXECUTION

3.01 EXAMINATION

A. Take field measurements to confirm shop drawings prior to fabrication to ensure proper fitting of work.

B. Inspect areas and conditions before installation. Notify Architect in writing of unsatisfactory or detrimental conditions. Do not proceed until conditions have been corrected. Commencing installation constitutes acceptance of work site conditions.

C. Coordinate electrical services to ensure they are correctly located and of the proper characteristics.

3.02 INSTALLATION

A. Install in accordance with contract documents and manufacturer's instructions.

B. Install equipment rigid, straight, plumb, and level.

C. Secure all equipment with manufacturer's recommended anchoring devices.

D. Separate dissimilar metals to prevent electrolytic corrosion.

3.03 ADJUSTING

A. Verify proper placement of equipment.

B. Verify proper placement of equipment anchors and sleeves. Use actual movable equipment to be anchored if available.

C. Adjust operating equipment for proper operation; remove and replace equipment causing noise or vibration. Lubricate equipment if recommended by manufacturer.

3.04 TESTING

A. Perform vibration testing to meet NCAA requirements.

3.05 TRAINING

A. Provide Owner training for safe operation. Review manuals with Owner representative. Instruct on maintenance, adjustments, etc.

END OF SECTION

SECTION 21 00 10
BASIC FIRE PROTECTION REQUIREMENTS

PART 1 GENERAL

1.01 SECTION INCLUDES

A. The Drawings and general provisions of the Contract, including General and Supplementary Conditions and Division 1 Specification Sections, apply to this and all other sections in this Division.

1.02 WORK INCLUDES

A. Scope: Provide the basic items, articles, materials, operations, and methods required by the Drawings and Specifications, including labor, equipment, supplies, and incidentals necessary for completion of Fire Protection work.

B. Drawings: The Drawings show the general arrangement of equipment, but due to their small scale are essentially diagrammatic and do not detail every point at which conflicts of construction may occur. Should conditions necessitate any deviation from the general layout shown on the Drawings or if such deviations are more advantageous, the Contractor shall submit Drawings to the Architect for review showing the proposed method of installation. If such changes are accepted, they shall become part of the Contract to which it is applied.

1.03 SCOPE OF WORK

A. The Contractor shall be solely responsible to arrange for, obtain and bear the cost of necessary permits, bonds and fees for the automatic sprinkler work.

B. Make the connection to the new fire protection main as indicated on plans and verify capacity of water supply provided to the fire protection service.

C. Furnish and install fire protection system where shown on the Drawings. The system shall include all piping, hangers, sprinkler heads, valves, controls, drains and alarms.

D. Furnish and install fire department connections located where shown on the Drawings.

E. Furnish and install all alarms, flow switches and alarm bells on the inside and outside of building. The installation shall include all wiring, conduit and associated devices required for a fully functional installation.

F. Provide testing of all piping and Work in full conformance with all applicable sections of NFPA 13.

G. Provide complete shop drawings with hydraulic calculations to the Architect and to the Fire Protection Authority Having Jurisdiction.

H. Provide certificates of inspection to the Architect for review upon completion of the Work.

I. Furnish and install all equipment and devices as shown on Drawings.

J. Periodically remove from the job site, all rubbish or debris resulting from the fire protection work.

K. Provide all other equipment and devices shown on the Drawings. This shall include all ancillary devices, wiring and associated components for the proper operation of all equipment installed or affected by this Project.

1.04 STANDARDS AND REGULATIONS

A. The work under the mechanical sections shall comply with the latest edition of the applicable standards and codes of the following:
   1. ASME-American Society of Mechanical Engineers
   2. ASHRAE-American Society of Heating, Refrigeration and Air Conditioning Engineers
   3. ARI-Air Conditioning and Refrigeration Institute
   4. ASTM-American Society for Testing Materials

5. ASA-American Standards Association
6. AWWA-American Water Works Association
7. NBFU-National Board of Fire Underwriters
8. AMCA-Air Moving and Conditioning Association
9. IBR-Institute of Boiler and Radiator Manufacturers
10. UL-Underwriters' Laboratories
11. NEMA-National Electric Manufacturers Association
12. NFPA #101-Current Edition Life Safety code
13. National Building Code
14. Illinois State Plumbing Code
15. Illinois Rules & Regulations for Fire Prevention and Safety
16. National, State and Local Building Codes
17. International Building Code
18. NFPA 13

B. Include all items of Labor and Material required to comply with such codes in accordance with Section "GENERAL CONDITIONS" Standards and Regulations, Article "Permits, Laws and Regulations". Where quantities, sizes or other requirements indicated on the drawings or herein specified are in excess of the Code requirements, the Specifications and/or Drawings shall govern regardless of the Code requirements.

1.05 SHOP DRAWINGS

A. Submit the following shop drawings and data sheets to the Architect for review.
1. Manufacturer's Drawings and performance data on all equipment.
2. Provide minimum 1/8" = 1'-0" scale Shop Drawings for all piping systems.
3. Dimensioned Drawings showing all required openings.
4. Dimensioned Drawings of all equipment rooms, including exact equipment locations.
5. Additional Shop Drawing requirements may be found in other section of this Specification.

B. The Contractor shall be responsible for all equipment fitting into the spaces allocated on the plans for such equipment. This shall include any Work required to move the equipment to the spaces shown on the Drawings.

C. When Shop Drawings are resubmitted after having been returned for correction, only the changes noted on the previously reviewed Drawings will be checked by the Architect on the resubmitted shop drawings. If additional changes, other than those previously noted, are made on the resubmitted Drawings, the Contractor shall notify the Architect in writing of such additional changes.

1.06 "RECORD" DRAWINGS

A. At the completion of the work, the Contractor shall provide to the Architect complete drawings pertaining to the Work, showing all equipment, pipe, ducts, outlets, etc., as actually installed with accurate dimensions locating all runs and branches. The Drawings shall be in electronic format -Autocad version 14 or newer and are not to be hand drawn on copies of the original Contract Drawings. Drawings are to be furnished as a minimum of (2) black line plots along with a CD-ROM with electronic drawing files.

1.07 COOPERATION BETWEEN TRADES

A. Each Subcontractor shall cooperate with all other Subcontractors. Each Subcontractor shall check, prior to commencement of work, for space requirements with all other Subcontractors Relocation of ducts, piping, etc., which may alter the architectural or structural construction must be reviewed by the Architect prior to relocation. No extra compensation will be allowed for Work resulting from these changes.

1.08 CARTING AND HANDLING

A. The Contractor shall furnish his own carting, handling and erecting of equipment and/or material included in this Contract.

1.09 DRAWINGS

A. The Drawings and details shall be taken as a diagrammatic means of installing piping, ductwork and other equipment. They are not intended to show every fitting and offset, nor every structural, electrical, piping or ductwork conflict that may be encountered during the installation of the Work. The Contractor shall be responsible to provide all additional duct or pipe fittings required to install the Work shown on the Drawings.

B. Consult all other Drawings included as part of this Project. The Drawings show the general arrangement of all piping, conduit and equipment. Examine the Drawings and Specifications carefully and notify the Architect by letter of any discrepancies so same can be rectified at the earliest possible date. The Contractor shall follow the Drawings as closely as possible for installation of all piping, ductwork and equipment.

C. The Contractor shall coordinate his work with all architectural, structural, electrical and mechanical features of the building.

D. Should conditions necessitate any rearrangement of piping, ductwork or equipment, or if same can be run to better advantage, the Contractor shall prepare and submit Drawings showing the changes before proceeding with the Work. If such changes are accepted, they shall become a part of this Contract after their approval.

E. Due to the small scale of the Drawings, it is not possible to show all offsets, and detail every point at which exigencies of construction may require special attention. Additional fittings, valves, traps, vacuum breakers, ducts, and other appurtenances necessary due to field conditions or Code requirements shall be furnished and installed by the Contractor at no additional cost to the Owner.

1.10 SITE AND JOB CONDITIONS

A. The Contractor shall review all other Drawings and coordinate the Work with same. No additional compensation shall be allowed for changes to adapt Work to coordinate with Work shown on other Drawings.

B. All dimensions, locations of equipment and connections to external utilities shall be reviewed in field prior to construction. The Architectural plans will hold precedence over mechanical plans as to location of partitions, etc. All construction dimensions shall be coordinated with the Architectural Drawings where discrepancies may exist.

1.11 MODIFICATIONS TO EXISTING EQUIPMENT

A. All existing equipment affected by this Project shall be treated as new.

B. The Contractor shall be responsible to provide new hangers for all existing equipment and piping to remain.

C. Existing hangers may remain if the insulation and hangers comply fully with all provisions of the Project Manual and Contract Drawings.

D. The Contractor shall be responsible for all modifications required for all existing pumps to provide the water flow quantities shown on the Drawings. These modifications shall include, but shall not be limited to, replacement or modifications of existing impellers and replacement of all gaskets and seals required to modify the existing pumps.

1.12 INSTALLATION OF EQUIPMENT

A. The Contractor shall be responsible to install all equipment as per the Manufacturer's written recommendations.

B. Due to the small scale of the drawings, not all devices and appurtenances can be shown on the Contract Documents. The Contractor shall include all devices, piping, wiring and other equipment required for a fully functional installation.

C. The Contractor shall be responsible to provide piping diagrams and all other required site specific information to the Equipment Manufacturer for review prior to installation of the equipment or any of the associated piping or devices.

D. All devices requiring service shall be installed in accessible locations. Access shall be provided at all control valves, isolation valves, control devices and panels, damper operators and motors. All such devices installed above suspended acoustical ceilings with removable pads shall be oriented such that the Manufacturer's recommended clearances are met. The Contractor shall provide access panels at all devices installed above all other ceilings, behind casework and in all other inaccessible locations. The minimum size of the access panels shall be 18"x18". Access panels shall be fire rated where installed in fire rated construction. Color of panels shall be as selected by the Architect.

E. The Contractor shall be responsible to provide all modifications to all equipment required to connect the equipment to the required electrical feeds. These modifications shall include, but shall not be limited to, replacement of wiring lugs required to fit power or control wiring and the installation of additional wiring or conduits.

F. Any modifications to the Work shown on the Contract Documents (including, but not limited to, additional devices, modifications to electrical feeds or modifications to piping sizes) required by the Equipment Manufacturer shall be provided by the Contractor. No additional compensation will be allowed for any modifications required by the Manufacturer for a fully functional installation.

1.13 FLOOR AND WALL PENETRATIONS

A. All floor and wall penetrations for all equipment including ductwork, piping, conduit, etc. shall be sealed. Sealant used shall be applied to both sides of penetration.

B. Rating of sealant used shall meet or exceed the UL fire rating of the floor or wall assembly.

C. Sealants shall remain flexible throughout the entire temperature and expansion range of the affected system.

D. All sealants used shall be fully plenum rated and shall have a flame spread rating of less than 25 and a smoke developed rating of not more than 50.

E. Insulation, where applied, shall be continuous through wall or floor penetration. Insulation thickness and vapor barrier integrity shall also remain continuous through penetration.

1.14 ACCEPTABLE BASE BID MANUFACTURERS

A. The Contract Documents have been prepared for the installation of the equipment scheduled on the Drawings. Acceptable Base Bid Manufacturers have been included in the Project Manual.

B. The Contractor shall be responsible to provide all modifications to the Work shown on the Drawings required for the installation of equipment provided by the Acceptable Base Bid Manufacturers. These modifications shall include, but shall not be limited to, electrical feeds, pipe sizes, support structure, etc.

C. All required modifications shall be coordinated by the Contractor prior to submitting the Bid. No additional compensation shall be allowed for any changes to the Work shown on the Drawings required for any equipment provided by an Acceptable Base Bid Manufacturer.

1.15 PROTECTION

A. The Contractor shall keep all pipe openings closed by means of plugs or caps to prevent entrance of foreign matter and shall cover all fixtures, equipment and apparatus as required to protect them against dirt, water, chemical or mechanical damage before, during and after

installation. Any such fixtures, equipment or apparatus damaged prior to final acceptance of the Work shall be restored to its original condition or replaced by the Contractor.

1.16 JURISDICTION OF WORK

A. Whenever it becomes necessary for a Subcontractor to furnish Labor and Materials other than that which is generally accepted by trade agreement or general practices to belong to his particular trade or branch of work, he shall Subcontract such work or branch of work involved.

B. However, if there is an overlapping of trades, practices or trade agreements and a jurisdictional dispute arises to claims of tradesmen of another Subcontractor, and a trade union settlement is made in favor of these tradesmen who claimed the work, he shall perform it at his own expense as if it has been included in his Work. All such Work shall be executed in such a manner that there will be no delay or stoppage of work due to infringement or alleged infringement of trade agreements as to jurisdiction.

1.17 CLEANING

A. The Contractor shall clean premises of all excess construction material and debris caused by the Work at the completion of the Work or at the direction of the Owner, Architect or Owner's agent during the course of the Project. All equipment provided by the Contractor shall be thoroughly washed down prior award of Substantial Completion.

1.18 INSTRUCTIONS AND TRAINING

A. The Contractor shall instruct the Owner's personnel in the operation and maintenance of equipment installed as part of this Project. In addition, the Contractor shall furnish to the Owner three (3) sets of typewritten instructions. The Contractor shall also furnish to the Owner three (3) sets of equipment maintenance and operations manuals for each item of equipment.

B. In addition to written instructions the Contractor shall provide field instruction as follows.
   1. Two sessions for a total hours of 8 hours

C. Notify the Architect seven days in advance of all instruction sessions so the Architect can coordinate with the Owner and be present.

D. For each session, the Contractor shall submit a training session log prepared by the Contractor and signed by the Owner and the Contractor. The log shall certify that the above has been satisfactorily completed and that the Owner's copies of manuals and written instruction were on hand at the time of the session.

E. All training sessions shall be video taped and two copies shall be provided to the Owner.

F. The training sessions shall be coordinated by the Contractor with all Subcontractors to avoid numerous trips by the Owner.

1.19 WARRANTY

A. All work shall be guaranteed for two years after Substantial Completion and final acceptance against all defects of material, equipment and workmanship. All defects appearing within two years shall be promptly remedied without further cost to the Owner.

B. All equipment shall be guaranteed to meet specified capacities and to operate within limits of noise level and vibration recommended in the current issue of the ASHRAE Guide and Data Book.

C. Any portion or the work performed by the Contractor that fails within the warranty period shall be repaired or replaced by the Contractor without additional cost to the Owner.

D. Additional specific warranties may be found in other sections of this Specification.

END OF SECTION

SECTION 21 05 00
COMMON WORK RESULTS FOR FIRE SUPPRESSION

PART 1 GENERAL

1.01 SECTION INCLUDES

A. Pipe, fittings, sleeves, escutcheons, seals, and connections for sprinkler systems.

1.02 RELATED REQUIREMENTS

A. Section 21 05 23 - General-Duty Valves for Water-Based Fire-Suppression Piping.

B. Section 21 05 53 - Identification for Fire Suppression Piping and Equipment: Piping identification.

C. Section 21 12 00 - Fire-Suppression Standpipes: Standpipe design.

D. Section 21 13 00 - Fire-Suppression Sprinkler Systems: Sprinkler systems design.

1.03 REFERENCE STANDARDS

A. ASME BPVC-IX - Boiler and Pressure Vessel Code, Section IX - Welding, Brazing, and Fusing Qualifications; 2015.

B. ASME B16.1 - Gray Iron Pipe Flanges and Flanged Fittings: Classes 25, 125, and 250; 2010.

C. ASME B16.3 - Malleable Iron Threaded Fittings: Classes 150 and 300; 2011.

D. ASME B16.4 - Gray Iron Threaded Fittings: Classes 125 and 250; 2011.

E. ASME B16.5 - Pipe Flanges and Flanged Fittings NPS 1/2 Through NPS 24 Metric/Inch Standard; 2013.

F. ASME B16.9 - Factory-Made Wrought Buttwelding Fittings; 2012.

G. ASME B16.11 - Forged Fittings, Socket-welding and Threaded; 2011.

H. ASME B16.25 - Buttwelding Ends; 2012.

I. ASME B36.10M - Welded and Seamless Wrought Steel Pipe; 2004.

J. ASTM A47/A47M - Standard Specification for Ferritic Malleable Iron Castings; 1999 (Reapproved 2014).

K. ASTM A53/A53M - Standard Specification for Pipe, Steel, Black and Hot-Dipped, Zinc-Coated, Welded and Seamless; 2012.

L. ASTM A135/A135M - Standard Specification for Electric-Resistance-Welded Steel Pipe; 2009 (Reapproved 2014).

M. ASTM A536 - Standard Specification for Ductile Iron Castings; 1984 (Reapproved 2014).

N. ASTM A795/A795M - Standard Specification for Black and Hot-Dipped Zinc-Coated (Galvanized) Welded and Seamless Steel Pipe for Fire Protection Use; 2013.

O. ASTM E814 - Standard Test Method for Fire Tests of Through-Penetration Fire Stops; 2013a.

P. AWS D1.1/D1.1M - Structural Welding Code - Steel; 2015.

Q. AWWA C606 - Grooved and Shouldered Joints; 2011.

R. ITS (DIR) - Directory of Listed Products; current edition.

S. NFPA 13 - Standard for the Installation of Sprinkler Systems; 2016.

T. NFPA 14 - Standard for the Installation of Standpipe and Hose Systems; 2013.

U. UL (DIR) - Online Certifications Directory; current listings at database.ul.com.

1.04 SUBMITTALS

A. Product Data: Provide manufacturers catalogue information. Indicate valve data and ratings.

B. Shop Drawings: Indicate pipe materials used, jointing methods, supports, floor and wall penetration seals. Indicate installation, layout, weights, mounting and support details, and piping connections.

C. Project Record Documents: Record actual locations of components and tag numbering.

D. Operation and Maintenance Data: Include installation instructions and spare parts lists.

1.05 QUALITY ASSURANCE

A. Manufacturer Qualifications: Company specializing in manufacturing the Products specified in this section with minimum three years documented experience.

B. Installer Qualifications: Company specializing in performing work of the type specified this section.
   1. Minimum three years experience.

C. Conform to UL and FM requirements.

D. Valves: Bear FM and UL (DIR) product listing label or marking. Provide manufacturer's name and pressure rating marked on valve body.

E. Products Requiring Electrical Connection: Listed and classified as suitable for the purpose specified and indicated.

1.06 DELIVERY, STORAGE, AND HANDLING

A. Deliver and store valves in shipping containers, with labeling in place.

B. Provide temporary protective coating on cast iron and steel valves.

C. Provide temporary end caps and closures on piping and fittings. Maintain in place until installation.

PART 2 PRODUCTS

2.01 FIRE PROTECTION SYSTEMS

A. Sprinkler Systems: Conform to NFPA 13.

B. Welding Materials and Procedures: Conform to ASME BPVC-IX.

2.02 ABOVE GROUND PIPING

A. Steel Pipe: ASTM A795 Schedule 10 or ASTM A795 Schedule 40, black.
   1. Cast Iron Fittings: ASME B16.1, flanges and flanged fittings and ASME B16.4, threaded fittings.
   2. Malleable Iron Fittings: ASME B16.3, threaded fittings and ASTM A47/A47M.
   3. Mechanical Grooved Couplings: Malleable iron housing clamps to engage and lock, "C" shaped elastomeric sealing gasket, steel bolts, nuts, and washers; galvanized for galvanized pipe.

2.03 PIPE SLEEVES

A. Vertical Piping:
   1. Sleeve Length: 1 inch above finished floor.
   2. Provide sealant for watertight joint.
   3. Blocked Out Floor Openings: Provide 1-1/2 inch angle set in silicon adhesive around opening.
   4. Drilled Penetrations: Provide 1-1/2 inch angle ring or square set in silicone adhesive around penetration.

B. Plastic, Sheet Metal, or Moisture-Resistant Fiber: Pipe passing through interior walls, partitions, and floors, unless steel or brass sleeves are specified below.

C. Clearances:
   1. Provide allowance for insulated piping.

2. Wall, Floor, Floor, Partitions, and Beam Flanges: 1 inch greater than external; pipe diameter.
3. All Rated Openings: Caulked tight with fire stopping material conforming to ASTM E814 in accordance with Section 07 84 00 to prevent the spread of fire, smoke, and gases.

2.04 ESCUTCHEONS

A. Manufacturers:
1. Fire Protection Products, Inc: www.fppi.com.com.
2. Viking Group Inc: www.vikinggroupinc.com.

B. Material:
1. Fabricate from nonferrous metal.
2. Chrome-plated.
3. Metals and Finish: Comply with ASME A112.18.1.

C. Construction:
1. One-piece for mounting on chrome-plated tubing or pipe and one-piece or split-pattern type elsewhere.
2. Internal spring tension devices or setscrews to maintain a fixed position against a surface.

2.05 PIPE HANGERS AND SUPPORTS

A. Hangers for Pipe Sizes 1/2 to 1-1/2 inch: Malleable iron, adjustable swivel, split ring.

B. Hangers for Pipe Sizes 2 inches and Over: Carbon steel, adjustable, clevis.

C. Multiple or Trapeze Hangers: Steel channels with welded spacers and hanger rods.

D. Wall Support for Pipe Sizes to 3 inches: Cast iron hook.

E. Wall Support for Pipe Sizes 4 inches and Over: Welded steel bracket and wrought steel clamp.

F. Vertical Support: Steel riser clamp.

G. Floor Support: Cast iron adjustable pipe saddle, lock nut, nipple, floor flange, and concrete pier or steel support.

2.06 MECHANICAL COUPLINGS

A. Rigid Mechanical Couplings for Grooved Joints:
1. Dimensions and Testing: Comply with AWWA C606.
2. Minimum Working Pressure: 300 psig.
3. Housing Material: Fabricate of ductile iron conforming to ASTM A536.
4. Housing Coating: Factory applied orange enamel.
5. Gasket Material: EPDM suitable for operating temperature range from minus 30 degrees F to 230 degrees F.
6. Bolts and Nuts: Hot dipped galvanized or zinc electroplated steel.

PART 3 EXECUTION

3.01 PREPARATION

A. Ream pipe and tube ends. Remove burrs. Bevel plain end ferrous pipe.

B. Remove scale and foreign material, from inside and outside, before assembly.

C. Prepare piping connections to equipment with flanges or unions.

3.02 INSTALLATION

A. Install sprinkler system and service main piping, hangers, and supports in accordance with NFPA 13.

B. Install standpipe piping, hangers, and supports in accordance with NFPA 14.

C. Route piping in orderly manner, plumb and parallel to building structure. Maintain gradient.

D. Install piping to conserve building space, to not interfere with use of space and other work.

E. Group piping whenever practical at common elevations.

F. Install piping to allow for expansion and contraction without stressing pipe, joints, or connected equipment.

G. Inserts:
   1. Provide inserts for placement in concrete formwork.
   2. Provide inserts for suspending hangers from reinforced concrete slabs and sides of reinforced concrete beams.
   3. Provide hooked rod to concrete reinforcement section for inserts carrying pipe over 4 inches.
   4. Where concrete slabs form finished ceiling, locate inserts flush with slab surface.
   5. Where inserts are omitted, drill through concrete slab from below and provide through-bolt with recessed square steel plate and nut above slab.

H. Pipe Hangers and Supports:
   1. Install hangers to provide minimum 1/2 inch space between finished covering and adjacent work.
   2. Place hangers within 12 inches of each horizontal elbow.
   3. Use hangers with 1-1/2 inch minimum vertical adjustment. Design hangers for pipe movement without disengagement of supported pipe.
   4. Support vertical piping at every other floor. Support riser piping independently of connected horizontal piping.
   5. Where several pipes can be installed in parallel and at same elevation, provide multiple or trapeze hangers.

I. Slope piping and arrange systems to drain at low points. Use eccentric reducers to maintain top of pipe level.

J. Prepare pipe, fittings, supports, and accessories for finish painting. Where pipe support members are welded to structural building framing, scrape, brush clean, and apply one coat of zinc rich primer to welding.

K. Do not penetrate building structural members unless indicated.

L. Provide sleeves when penetrating footings, floors, walls, and partitions and seal pipe and sleeve penetrations to achieve fire resistance equivalent to fire separation required.
   1. Aboveground Piping:
      a. Pack solid using mineral fiber conforming to ASTM C592.
      b. Fill space with an elastomer caulk to a depth of 0.50 inch where penetrations occur between conditioned and unconditioned spaces.
   2. All Rated Openings: Caulk tight with fire stopping material conforming to ASTM E814 in accordance with Section 07 84 00 to prevent the spread of fire, smoke, and gases.
   3. Caulk exterior wall sleeves watertight with lead and oakum or mechanically expandable chloroprene inserts with mastic-sealed components.

M. Escutcheons:
   1. Install and firmly attach escutcheons at piping penetrations into finished spaces.
   2. Provide escutcheons on both sides of partitions separating finished areas through which piping passes.
   3. Attach plates at the underside only of suspended ceilings.
   4. Use chrome plated escutcheons in occupied spaces and to conceal openings in construction.

N. When installing more than one piping system material, ensure system components are compatible and joined to ensure the integrity of the system. Provide necessary joining fittings. Ensure flanges, union, and couplings for servicing are consistently provided.

O. Die cut threaded joints with full cut standard taper pipe threads with PTFE joint compound applied to male threads only.

3.03 SCHEDULES

A. Hanger Spacing for Steel Piping.
   1. 1/2 inch, 3/4 inch, and 1 inch: Maximum span, 7 feet; minimum rod size, 1/4 inch
   2. 1-1/4 inches: Maximum span, 8 feet; minimum rod size, 3/8 inch
   3. 1-1/2 inches: Maximum span, 9 feet; minimum rod size, 3/8 inch
   4. 2 inches: Maximum span, 10 feet; minimum rod size, 3/8 inch
   5. 2-1/2 inches: Maximum span, 10 feet; minimum rod size, 3/8 inch
   6. 3 inches: Maximum span, 10 feet; minimum rod size, 3/8 inch
   7. 4 inches: Maximum span, 10 feet; minimum rod size, 1/2 inch
   8. 6 inches: Maximum span, 10 feet; minimum rod size, 1/2 inch.

3.04 CLEANING

A. Upon completion of work, clean all parts of the installation.

B. Clean equipment, pipes, valves, and fittings of grease, metal cuttings, and sludge that may have accumulated from the installation and testing of the system.

END OF SECTION

SECTION 21 05 23

GENERAL-DUTY VALVES FOR WATER-BASED FIRE-SUPPRESSION PIPING

PART 1 GENERAL

1.01 SECTION INCLUDES

A. Two-piece ball valves with indicators.

B. Bronze butterfly valves with indicators.

C. Iron butterfly valves with indicators.

D. Check valves.

E. Bronze OS&Y gate valves.

F. Iron OS&Y gate valves.

G. NRS gate valves.

H. Trim and drain valves.

1.02 RELATED REQUIREMENTS

A. Section 21 05 00 - Common Work Results for Fire Suppression: Pipe and fittings.

B. Section 21 05 53 - Identification for Fire Suppression Piping and Equipment.

C. Section 21 12 00 - Fire-Suppression Standpipes.

D. Section 21 13 00 - Fire-Suppression Sprinkler Systems.

E. Section 26 05 83 - Wiring Connections: Electrical characteristics and wiring connections.

1.03 ABBREVIATIONS AND ACRONYMS

A. EPDM: Ethylene-propylene diene monomer.

B. NBR: Acrylonitrile-butadiene, Buna-N, or nitrile rubber.

C. NRS: Non-rising stem.

D. OS&Y: Outside screw and yoke.

E. PTFE: Polytetrafluoroethylene.

F. SBR: Styrene-butadiene rubber.

1.04 REFERENCE STANDARDS

A. ASME B1.20.1 - Pipe Threads, General Purpose (Inch); 2013.

B. ASME B16.1 - Gray Iron Pipe Flanges and Flanged Fittings: Classes 25, 125, and 250; 2010.

C. ASME B31.9 - Building Services Piping; 2014.

D. ASME BPVC-IX - Boiler and Pressure Vessel Code, Section IX - Welding, Brazing, and Fusing Qualifications; 2015.

E. AWWA C606 - Grooved and Shouldered Joints; 2011.

F. FM (AG) - FM Approval Guide; current edition.

G. NFPA 13 - Standard for the Installation of Sprinkler Systems; 2016.

H. UL (DIR) - Online Certifications Directory; current listings at database.ul.com.

I. UL 262 - Gate Valves for Fire-Protection Service; Current Edition, Including All Revisions.

J. UL 312 - Check Valves for Fire-Protection Service; Current Edition, Including All Revisions.

K. UL 1091 - Standard for Butterfly Valves for Fire-Protection Service; Current Edition, Including All Revisions.

1.05 SUBMITTALS

A. Product Data: Provide data on valves including manufacturers catalog information. Submit performance ratings, rough-in details, weights, support requirements, and piping connections.

B. Warranty: Submit manufacturer warranty and ensure that forms have been completed in Owner's name and registered with manufacturer.

C. Operation and Maintenance Data: Include manufacturer's descriptive literature, operating instructions, maintenance and repair data, and parts listings.

1.06 QUALITY ASSURANCE

A. Manufacturer Qualifications:
   1. Obtain valves for each valve type from single manufacturer.
   2. Company must specialize in manufacturing products specified in this section, with not less than three years of documented experience.

B. Where listed products are specified, provide products listed, classified, and labeled by FM (AG), UL (DIR), or testing firm acceptable to authorities having jurisdiction as suitable for the purpose indicated.

C. Welding Materials and Procedures: Conform to ASME BPVC-IX.

D. Installer Qualifications:
   1. Company specializing in performing the work of this section with minimum five years documented experience.
   2. Trained and approved by manufacturer to design, install, test and maintain the equipment specified herein.
   3. Complies with manufacturer's certification requirements.
   4. Complies with manufacturer's insurance requirements.

1.07 DELIVERY, STORAGE, AND HANDLING

A. Prepare valves for shipping as follows:
   1. Protect internal parts against rust and corrosion.
   2. Protect threads and flange faces.
   3. Set valves open to minimize exposure of functional surfaces.

B. Use the following precautions during storage:
   1. Maintain valve end protection and protect flanges and specialties from dirt.
      a. Provide temporary inlet and outlet caps.
      b. Maintain caps in place until installation.
   2. Store valves in shipping containers and maintain in place until installation.
      a. Store valves indoors and maintain at higher than ambient dew point temperature.
      b. If outdoor storage is unavoidable, store valves off the ground in watertight enclosures.

C. Use the following precautions for handling:
   1. Use sling to handle large valves, rigged to avoid damage to exposed parts.
   2. Do not use operating handles or stems as lifting or rigging points.

PART 2 PRODUCTS

2.01 GENERAL REQUIREMENTS

A. UL Listed: Provide valves listed in UL (DIR) under following headings and bearing UL mark:
   1. Main Level: HAMV - Fire Main Equipment.
      a. Level 1: HCBZ - Indicator Posts, Gate Valve.
      b. Level 1: HLOT - Valves.
      c. Level 3: HLUG - Ball Valves, System Control.
      d. Level 3: HLXS - Butterfly Valves.
      e. Level 3: HMER - Check Valves.

f. Level 3: HMRZ - Gate Valves.
2. Main Level: VDGT - Sprinkler System & Water Spray System Devices.
a. Level 1: VQGU - Valves, Trim, and Drain.

B. FM Global Approved: Provide valves listed in FM (AG) Approval Guide under the following headings:
1. Automated Sprinkler Systems:
a. Valves:
1) Gate valves.
2) Single check valves.
3) Miscellaneous valves.

C. ASME Compliance:
1. ASME B16.1 for flanges on iron valves.
2. ASME B1.20.1 for threads on threaded-end valves.
3. ASME B31.9 for building services piping valves.

D. Comply with AWWA C606 for grooved-end connections.

E. Comply with NFPA 13 for valves.

F. Valve Pressure Ratings: Not less than minimum pressure rating indicated or higher as required.

G. Valve Sizes: Same as upstream piping unless otherwise indicated.

H. Valve Actuator Types:
1. Worm-gear actuator with handwheel for quarter-turn valves, except trim and drain valves.
2. Handwheel: For other than quarter-turn trim and drain valves.
3. Hand-lever: For quarter-turn trim and drain valves 2 NPS and smaller.

2.02 TWO-PIECE BALL VALVES WITH INDICATORS

A. Description:
1. Minimum Pressure Rating: 175 psig.
2. Body Design: Two piece.
3. Body Material: Forged brass or bronze.
4. Port Size: Full or standard.
5. Seat: PTFE.
6. Stem: Bronze or stainless steel.
7. Ball: Chrome-plated brass.
8. Actuator: Worm gear or traveling nut.
9. End Connections for Valves 1 NPS through 2 NPS: Threaded ends.
10. End Connections for Valves 2-1/2 NPS: Grooved ends.

2.03 BRONZE BUTTERFLY VALVES WITH INDICATORS

A. UL 1091 and FM (AG) standard listing for indicating valves, (butterfly or ball type), Class Number 1112.

B. Minimum Pressure Rating: 175 psig.

C. Body Material: Bronze.

D. Seat: EPDM.

E. Stem: Bronze or stainless steel.

F. Disc: Bronze with EPDM coating.

G. Actuator: Worm gear or traveling nut.

H. Supervisory Switch: Internal or external.

I. End Connections for Valves 1 NPS through 2 NPS: Threaded ends.

J. End Connections for Valves 2-1/2 NPS: Grooved ends.

2.04 IRON BUTTERFLY VALVES WITH INDICATORS

A. UL 1091 and FM (AG) standard listing for indicating valves (butterfly or ball type), Class Number 112.

B. Minimum Pressure Rating: 175 psig.

C. Body Material: Cast or ductile iron with nylon or EPDM coating.

D. Seat: EPDM.

E. Stem: Stainless steel.

F. Disc: Ductile iron, nickel plated.

G. Actuator: Worm gear or traveling nut.

H. Supervisory Switch: Internal or external.

I. Body Design: Grooved-end connections.

2.05 CHECK VALVES

A. UL 312 and FM (AG) standard listing for check valves, Class Number 1045.

B. Minimum Pressure Rating: 175 psig.

C. Type: Center guided check valve.

D. Body Material: Cast iron, ductile iron.

E. Center guided check with elastomeric seal.

F. Hinge Spring: Stainless steel.

G. End Connections: Flanged, grooved, or threaded.

2.06 BRONZE OS&Y GATE VALVES

A. UL 262 and FM (AG) standard listing for fire-service water control valves (OS&Y and NRS-type gate valves).

B. Minimum Pressure Rating: 175 psig.

C. Body and Bonnet Material: Bronze or brass.

D. Wedge: One-piece bronze or brass.

E. Wedge Seat: Bronze.

F. Stem: Bronze or brass.

G. Packing: Non-asbestos PTFE.

H. Supervisory Switch: External.

I. End Connections: Threaded.

2.07 IRON OS&Y GATE VALVES

A. UL 262 and FM (AG) standard listing for fire-service water control valves (OS&Y and NRS-type gate valves).

B. Minimum Pressure Rating: 175 psig.

C. Body and Bonnet Material: Cast or ductile iron.

D. Wedge: Cast or ductile iron, or bronze with elastomeric coating.

E. Wedge Seat: Cast or ductile iron, or bronze with elastomeric coating.

F. Stem: Brass or bronze.

G. Packing: Non-asbestos PTFE.

H. Supervisory Switch: External.

I. End Connections: Flanged.

2.08 NRS GATE VALVES

A. UL 262 and FM (AG) standard listing for fire-service water control valves (OS&Y and NRS-type gate valves).

B. Minimum Pressure Rating: 175 psig.

C. Body and Bonnet Material: Cast or ductile iron.

D. Wedge: Cast or ductile iron with elastomeric coating.

E. Wedge Seat: Cast or ductile iron, or bronze with elastomeric coating.

F. Stem: Brass or bronze.

G. Packing: Non-asbestos PTFE.

H. Supervisory Switch: External.

I. End Connections: Flanged.

2.09 TRIM AND DRAIN VALVES

A. Ball Valves:
   1. Description:
      a. Pressure Rating: 175 psig.
      b. Body Design: Two piece.
      c. Body Material: Forged brass or bronze.
      d. Port Size: Full or standard.
      e. Seat: PTFE.
      f. Stem: Bronze or stainless steel.
      g. Ball: Chrome-plated brass.
      h. Actuator: Hand-lever.
      i. End Connections for Valves 1 NPS through 2-1/2 NPS: Threaded ends.
      j. End Connections for Valves 1-1/4 NPS and 2-1/2 NPS: Grooved ends.

B. Angle Valves:
   1. Description:
      a. Pressure Rating: 175 psig.
      b. Body Material: Brass or bronze.
      c. Ends: Threaded.
      d. Stem: Bronze.
      e. Disc: Bronze.
      f. Packing: Asbestos free.
      g. Handwheel: Malleable iron, bronze, or aluminum.

C. Globe Valves:
   1. Description:
      a. Pressure Rating: 175 psig.
      b. Body Material: Bronze with integral seat and screw-in bonnet.
      c. Ends: Threaded.
      d. Stem: Bronze.
      e. Disc Holder and Nut: Bronze.
      f. Disc Seat: Nitrile.
      g. Packing: Asbestos free.
      h. Handwheel: Malleable iron, bronze, or aluminum.

PART 3 EXECUTION

3.01 EXAMINATION

A. Confirm valve interior to be free of foreign matter and corrosion.

B. Remove packing materials.

C. Examine guides and seats by operating valves from the fully open position to the fully closed position.

D. Examine valve threads and mating pipe for form and cleanliness.

E. Examine mating flange faces for conditions that might cause leakage.
   1. Check bolting for proper size, length, and material.
   2. Verify gasket for size, defects, damage, and suitable material composition for service.
   3. Replace all defective valves with new valves.

3.02 INSTALLATION

A. Comply with specific valve installation requirements and application in the following Sections:
   1. Section 21 12 00 for application of valves in fire-suppression standpipes.
   2. Section 21 13 00 for application of valves in wet and dry pipe, fire-suppression sprinkler systems.

B. Install listed fire protection shutoff valves supervised-open, located to control sources of water supply except from fire department connections.
   1. Install permanent identification signs indicating portion of system controlled by each valve.

C. Install check valve in water supply connections and backflow preventer at potable water supply connections.

D. Valves with threaded connections to have unions at equipment arranged for easy access, service, maintenance, and equipment removal without system shutdown.

E. Valves in horizontal piping installed with stem at or above the pipe center.

F. Position valves to allow full stem movement.

G. Install valve tags. Comply with Section 21 05 53 requirements for valve tags, schedules, and signs on surfaces concealing valves; and the appropriate NFPA standard applying to the piping system in which valves are installed.

END OF SECTION

SECTION 21 05 53
IDENTIFICATION FOR FIRE SUPPRESSION PIPING AND EQUIPMENT

PART 1 GENERAL

1.01 SECTION INCLUDES

A. Nameplates.

B. Tags.

C. Pipe markers.

1.02 REFERENCE STANDARDS

A. ASME A13.1 - Scheme for the Identification of Piping Systems; 2007.

B. ASTM D709 - Standard Specification for Laminated Thermosetting Materials; 2013.

1.03 SUBMITTALS

A. List: Submit list of wording, symbols, letter size, and color coding for mechanical identification.

B. Chart and Schedule: Submit valve chart and schedule, including valve tag number, location, function, and valve manufacturer's name and model number.

C. Product Data: Provide manufacturers catalog literature for each product required.

D. Manufacturer's Installation Instructions: Indicate special procedures, and installation instructions.

E. Project Record Documents: Record actual locations of tagged valves.

PART 2 PRODUCTS

2.01 IDENTIFICATION APPLICATIONS

A. Automatic Controls: Tags.

B. Control Panels: Nameplates.

C. Instrumentation: Tags.

D. Major Control Components: Nameplates.

E. Piping: Pipe markers.

F. Pumps: Nameplates.

G. Relays: Tags.

H. Small-sized Equipment: Tags.

I. Valves: Tags and ceiling tacks where above lay-in ceilings.

2.02 NAMEPLATES

A. Manufacturers:
   1. Brimar Industries, Inc.: www.pipemarker.com.
   2. Kolbi Pipe Marker Company.: www.kolbipipemarkers.com.
   3. Seton Identification Products, a Tricor Direct Company: www.seton.com.

B. Description: Laminated three-layer plastic with engraved letters.
   1. Letter Color: White.
   2. Letter Height: 1/4 inch.
   3. Background Color: Black.
   4. Thickness: 1/8 inch.
   5. Plastic: Conform to ASTM D709.

2.03 TAGS

A. Manufacturers:

1. Advanced Graphic Engraving, LLC: www.advancedgraphicengraving.com.
2. Brady Corporation: www.bradycorp.com.
3. Brimar Industries, Inc.: www.pipemarker.com.
4. Kolbi Pipe Marker Company.: www.kolbipipemarkers.com.
5. Seton Identification Products, a Tricor Direct Company: www.seton.com.

B. Metal Tags: Brass with stamped letters; tag size minimum 1-1/2 inch diameter with smooth edges.

C. Valve Tag Chart: Typewritten letter size list in anodized aluminum frame.

2.04 PIPE MARKERS

A. Manufacturers:
1. Brady Corporation: www.bradycorp.com.
2. Brimar Industries, Inc.: www.pipemarker.com.
3. Kolbi Pipe Marker Company.: www.kolbipipemarkers.com.
4. MIFAB, Inc.: www.mifab.com.
5. Seton Identification Products, a Tricor Company: www.seton.com.

B. Color: Conform to ASME A13.1.

C. Plastic Tape Pipe Markers: Flexible, vinyl film tape with pressure sensitive adhesive backing and printed markings.

D. Color code as follows:
1. Fire Quenching Fluids: Red with white letters.

2.05 CEILING TACKS

A. Description: Steel with 3/4 inch diameter color coded head.

PART 3 EXECUTION

3.01 PREPARATION

A. Degrease and clean surfaces to receive adhesive for identification materials.

3.02 INSTALLATION

A. Install nameplates with corrosive-resistant mechanical fasteners, or adhesive. Apply with sufficient adhesive to ensure permanent adhesion and seal with clear lacquer.

B. Install tags with corrosion resistant chain.

C. Install plastic tape pipe markers complete around pipe in accordance with manufacturer's instructions.

D. Use tags on piping 3/4 inch diameter and smaller.
1. Identify service, flow direction, and pressure.
2. Install in clear view and align with axis of piping.
3. Locate identification not to exceed 20 feet on straight runs including risers and drops, adjacent to each valve and Tee, at each side of penetration of structure or enclosure, and at each obstruction.

E. Locate ceiling tacks to locate valves above T-bar type panel ceilings. Locate in corner of panel closest to equipment.

END OF SECTION

SECTION 21 13 00
FIRE-SUPPRESSION SPRINKLER SYSTEMS

PART 1 GENERAL

1.01 SECTION INCLUDES

A. Wet-pipe sprinkler system.

B. System design, installation, and certification.

C. Fire department connections.

1.02 RELATED REQUIREMENTS

A. Section 21 05 00 - Common Work Results for Fire Suppression: Pipe and fittings.

B. Section 21 05 23 - General-Duty Valves for Water-Based Fire-Suppression Piping.

C. Section 21 05 53 - Identification for Fire Suppression Piping and Equipment.

D. Section 21 12 00 - Fire-Suppression Standpipes.

E. Section 21 30 00 - Fire Pumps.

F. Section 26 05 83 - Wiring Connections: Electrical characteristics and wiring connections.

1.03 REFERENCE STANDARDS

A. NFPA 13 - Standard for the Installation of Sprinkler Systems; 2016.

B. NFPA 1963 - Standard for Fire Hose Connections; 2014.

C. UL (DIR) - Online Certifications Directory; current listings at database.ul.com.

1.04 SUBMITTALS

A. Product Data: Provide data on sprinklers, valves, and specialties, including manufacturers catalog information. Submit performance ratings, rough-in details, weights, support requirements, and piping connections.

B. Shop Drawings:
   1. Submit preliminary layout of finished ceiling areas indicating only sprinkler locations coordinated with ceiling installation.
   2. Indicate hydraulic calculations, detailed pipe layout, hangers and supports, sprinklers, components and accessories. Indicate system controls.
   3. Submit shop drawings to Authorities Having Jurisdiction for approval. Submit proof of approval to Engineer.

C. Manufacturer's Certificate: Certify that system has been tested and meets or exceeds specified requirements and code requirements.

D. Operation and Maintenance Data: Include components of system, servicing requirements, record drawings, inspection data, replacement part numbers and availability, and location and numbers of service depot.

E. Maintenance Materials: Furnish the following for Owner's use in maintenance of project.
   1. Extra Sprinklers: Type and size matching those installed, in quantity required by referenced NFPA design and installation standard.
   2. Sprinkler Wrenches: For each sprinkler type.

F. Project Record Documents: Record actual locations of sprinklers and deviations of piping from drawings. Indicate drain and test locations.

1.05 QUALITY ASSURANCE

A. Maintain one copy of referenced design and installation standard on site.

B. Conform to FM (AG) requirements.

C. Designer Qualifications: Design system under direct supervision of a Professional Fire Protection Engineer experienced in design of this type of work and licensed in the State in which the Project is located.

D. Manufacturer Qualifications: Company specializing in manufacturing the Products specified in this section with minimum three years documented experience.

E. Installer Qualifications: Company specializing in performing the work of this section with minimum three years experience and approved by manufacturer.

F. Equipment and Components: Provide products that bear UL (DIR) label or marking.

G. Products Requiring Electrical Connection: Listed and classified by UL (DIR) as suitable for the purpose specified and indicated.

1.06 DELIVERY, STORAGE, AND HANDLING

A. Store products in shipping containers and maintain in place until installation. Provide temporary inlet and outlet caps. Maintain caps in place until installation.

PART 2 PRODUCTS

2.01 MANUFACTURERS

A. Sprinklers, Valves, and Equipment:
   1. Tyco Fire Protection Products, a Tyco Business: www.tyco-fire.com.
   2. Viking Corporation: www.vikinggroupinc.com.

2.02 SPRINKLER SYSTEM

A. Sprinkler System: Provide coverage for entire building.

B. Occupancy: Light hazard; comply with NFPA 13.

C. Water Supply: Determine volume and pressure from water flow test data.
   1. Revise design when test data available prior to submittals.

D. Provide fire department connections where indicated.

E. Storage Cabinet for Spare Sprinklers and Tools: Steel, located adjacent to alarm valve.

2.03 SPRINKLERS

A. Suspended Ceiling Type: Concealed pendant type with matching push on cover plate.
   1. Response Type: Quick.
   2. Coverage Type: Standard.
   3. Finish: Enamel, color as selected.
   4. Escutcheon Plate Finish: Enamel, color as selected.
   5. Fusible Link: Glass bulb type temperature rated for specific area hazard.

B. Exposed Area Type: Upright type with guard.
   1. Response Type: Quick.
   2. Coverage Type: Standard.
   3. Finish: Brass.
   4. Fusible Link: Glass bulb type temperature rated for specific area hazard.

C. Sidewall Type: Semi-recessed horizontal sidewall type with matching push on escutcheon plate.
   1. Response Type: Quick.
   2. Coverage Type: Standard.
   3. Finish: Chrome plated.
   4. Escutcheon Plate Finish: Chrome plated.
   5. Fusible Link: Glass bulb type temperature rated for specific area hazard.

D. Dry Sprinklers: Concealed pendant type with matching push on cover plate.
   1. Response Type: Quick.

2. Coverage Type: Standard.
3. Finish: Enamel, color as selected.
4. Cover Plate Finish: Enamel, color as selected.
5. Fusible Link: Glass bulb type temperature rated for specific area hazard.

E. Guards: Finish to match sprinkler finish.

F. Flexible Drop System: Stainless steel, multiple use, open gate type.
1. Manufacturers:
a. Victaulic Company; Vic-Flex: www.victaulic.com.
b. FlexHead Industries, Inc.:www.flexhead.com.
2. Description:
a. Flexible Sprinkler Hose Fittings for use in commercial suspended ceilings and sheetrock ceilings.
b. Regulatory Requirements: In accordance with NFPA 13.
3. Product Performance Criteria:
a. FM Approved for its intended use pursuant to FM 1637 Approval Standard for Flexible Sprinkler Hose with Threaded End Fittings.
b. UL Listed for its intended use pursuant to UL 2443 Standard for Flexible Sprinkler Hose with Fittings for Fire Protection Service.
c. Seismically qualified for use pursuant to ICC-ES AC-156 Acceptance Criteria for Seismic Qualification by Shake-Table Testing of Nonstructural Components and Systems.
4. Materials:
a. Hose Assemblies and End Fittings:
1) Composition: 100% Type 304 Stainless Steel.
2) Straight Hose Assemblies:
(a) 2 through 6 foot assembly lengths
(b) 1/2" or 3/4" outlets
(c) 175 psi rated pressure
(d) Fully welded non-mechanical fittings, braided, leak-tested with minimum 1 inch true-bore internal corrugated hose diameter.
3) Elbow Hose Assemblies (For use in confined spaces):
(a) 2 through 6 foot assembly lengths
(b) 1/2" or 3/4" outlets
(c) 175 psi rated pressure
(d) Fully welded non-mechanical fittings, braided, leak-tested with minimum 1 inch true-bore internal corrugated hose diameter.
b. Ceiling Bracket:
1) Composition: Type G90 Galvanized Steel.
2) Type: Direct attachment type, having integrated snap-on clip ends positively attached to the ceiling using tamper-resistant screws.
3) Flexible Hose Attachment: Removable hub type with set screw.

2.04 PIPING SPECIALTIES

A. Wet Pipe Sprinkler Alarm Valve: Check type valve with divided seat ring, rubber faced clapper to automatically actuate water motor alarm, pressure retard chamber and variable pressure trim with the following additional capabilities and features:
1. Activate electric alarm.
2. Test and drain valve.
3. Replaceable internal components without removing valve from installed position.

B. Backflow Preventer: Reduced pressure principle valve assembly backflow preventer with drain and OS & Y gate valve on each end.

C. Test Connections:
   1. Inspector's Test Connection for Preaction Systems:
      a. Provide test connections approximately 6 ft above floor for each or portion of each sprinkler system equipped with an alarm device, located at the most remote part of each system.
      b. Route test connection to an open-site drain location, excluding janitor sinks, accepting full flow without negative consequences.
      c. Supply discharge orifice with same size as corresponding sprinkler orifice.
      d. Limit vertical height of exterior wall penetration to 2 ft above finished grade.
   2. Backflow Preventer Test Connection:
      a. Provide downstream of the backflow prevention assembly, listed hose valves with 2.5 inch National Standard male hose threads with cap and chain.
      b. Furnish one valve for each 250 gpm of system demand or fraction thereof.
      c. Provide permanent sign reading "Test Valve" in accordance with Section 22 05 53.

D. Electric Alarm: Electrically operated red enameled gong with pressure alarm switch.

E. Water Flow Switch: Vane type switch for mounting horizontal or vertical, with two contacts; rated 10 amp at 125 volt AC and 2.5 amp at 24 volt DC.

F. Fire Department Connections:
   1. Type: Exposed, projected wall mount made of corrosion resistant metal complying with UL 405.
      a. Inlets: Two way, 2-1/2 inch swivel fittings, internal threaded. Thread size and inlets according to NFPA 1963 or Authority Having Jurisdiction. Brass caps with gaskets, chains, and lugs.
      b. Outlet: Back with pipe threads, 4 NPS.
      c. Rated Working Pressure: 175 psi.
      d. Finish: Chrome.
      e. Signage: Raised or engraved lettering 1 inch minimum indicating system type.

PART 3 EXECUTION

3.01 SYSTEM DESIGN

A. The Contractor shall be responsible for the final design of all system piping and components. All required equipment shall be included as part of this Project.

B. All zones shall be as indicated on the Drawings.

C. All piping, where shown on the Drawings, shall be installed as closely as possible to the locations shown.

D. No piping shall be installed in electrical rooms, elevator machine rooms, elevator hoistways and all other similar areas. Only piping feeding devices in these areas shall be allowed to be installed in these areas.

E. Provide dry type sprinkler heads in all locations requiring such heads. These locations shall include, but shall not be limited to, outside storage areas and walk-in freezers and coolers.

F. Provide all systems and components as shown on the Drawings and or required by NFPA 13. Provide dry pipe systems for all areas exposed to temperatures below 40 degrees F.

G. All mains shall be assumed to be 6" unless noted otherwise. Main pipe sizes may be reduced in size where justified by hydraulic calculations.

3.02 INSTALLATION

A. Install in accordance with referenced NFPA design and installation standard.

B. Install equipment in accordance with manufacturer's instructions.

C. Provide approved backflow preventer assembly at sprinkler system water source connection.

D. Locate fire department connection with sufficient clearance from walls, obstructions, or adjacent siamese connectors to allow full swing of fire department wrench handle. Coordinate the exact location and elevation of the fire department connection with the local fire department prior to installation.

E. Locate outside alarm gong on building wall adjacent to the fire department connection..

F. Place pipe runs to minimize obstruction to other work.

G. Place piping in concealed spaces above finished ceilings.

H. Center sprinklers in two directions in ceiling tile and provide piping offsets as required.

I. Apply masking tape or paper cover to ensure concealed sprinklers, cover plates, and sprinkler escutcheons do not receive field paint finish. Remove after painting. Replace painted sprinklers.

J. Install air compressor on vibration isolators. Refer to Section 22 05 48.

K. Flush entire piping system of foreign matter.

L. Install guards on sprinklers where indicated.

M. Hydrostatically test entire system.

N. Require test be witnessed by Fire Marshal.

3.03 INTERFACE WITH OTHER PRODUCTS

A. Ensure required devices are installed and connected as required to fire alarm system.

3.04 SCHEDULES

A. System Hazard Areas:
   1. Offices, classrooms, hallways, gymnasium and storage rooms: Light Hazard.
   2. Mechanical rooms: Ordinary Hazard, Group 2.

END OF SECTION

SECTION 23 05 10
BASIC MECHANICAL REQUIREMENTS

PART 1 GENERAL

1.01 SECTION INCLUDES

A. The Drawings and general provisions of the Contract, including General and Supplementary Conditions and Division 1 Specification Sections, apply to this and all other sections in Division 23.

1.02 WORK INCLUDES

A. Scope: Provide the basic items, articles, materials, operations, and methods required by the Drawings and Specifications, including labor, equipment, supplies, and incidentals necessary for completion of Mechanical work.

B. Drawings: The Drawings show the general arrangement of equipment, but due to their small scale are essentially diagrammatic and do not detail every point at which conflicts of construction may occur. Should conditions necessitate any deviation from the general layout shown on the Drawings or if such deviations are more advantageous, the Contractor shall submit Drawings to the Architect for review showing the proposed method of installation. If such changes are accepted, they shall become part of the Contract to which it is applied.

1.03 SCOPE OF WORK

A. Provide all supply, return, and exhaust ductwork.

B. Provide all ductwork insulation.

C. Provide all other equipment and devices shown on the Drawings. This shall include all ancillary devices, wiring and associated components for the proper operation of all equipment installed or affected by this Project.

1.04 STANDARDS AND REGULATIONS

A. The work under the mechanical sections shall comply with the latest edition of the applicable standards and codes of the following:
   1. ASME-American Society of Mechanical Engineers
   2. ASHRAE-American Society of Heating, Refrigeration and Air Conditioning Engineers
   3. ARI-Air Conditioning and Refrigeration Institute
   4. ASTM-American Society for Testing Materials
   5. ASA-American Standards Association
   6. AWWA-American Water Works Association
   7. NBFU-National Board of Fire Underwriters
   8. AMCA-Air Moving and Conditioning Association
   9. IBR-Institute of Boiler and Radiator Manufacturers
   10. UL-Underwriters' Laboratories
   11. NEMA-National Electric Manufacturers Association
   12. NFPA #101-Current Edition Life Safety code
   13. National Building Code
   14. Illinois State Plumbing Code, Current Edition
   15. Illinois Rules & Regulations for Fire Prevention and Safety
   16. National, State and Local Building Codes
   17. International Building Code

B. Include all items of Labor and Material required to comply with such codes in accordance with Section "GENERAL CONDITIONS" Standards and Regulations, Article "Permits, Laws and Regulations". Where quantities, sizes or other requirements indicated on the drawings or herein specified are in excess of the Code requirements, the Specifications and/or Drawings shall govern regardless of the Code requirements.

1.05 SHOP DRAWINGS

A. Submit the following shop drawings and data sheets to the Architect for review.
   1. Manufacturer's Drawings and performance data on all equipment.
   2. Provide minimum 1/8" = 1'-0" scale Shop Drawings for all ductwork and piping systems.
   3. Dimensioned Drawings showing all required openings.
   4. Dimensioned Drawings of all equipment rooms, including exact equipment locations.
   5. Additional Shop Drawing requirements may be found in other section of this Specification.

B. The Contractor shall be responsible for all equipment fitting into the spaces allocated on the plans for such equipment. This shall include any Work required to move the equipment to the spaces shown on the Drawings.

C. When Shop Drawings are resubmitted after having been returned for correction, only the changes noted on the previously reviewed Drawings will be checked by the Architect on the resubmitted shop drawings. If additional changes, other than those previously noted, are made on the resubmitted Drawings, the Contractor shall notify the Architect in writing of such additional changes.

1.06 "RECORD" DRAWINGS

A. At the completion of the work, the Contractor shall provide to the Architect complete drawings pertaining to the Work, showing all equipment, pipe, ducts, outlets, etc., as actually installed with accurate dimensions locating all runs and branches. The Drawings shall be in electronic format -Autocad version 14 or newer and are not to be hand drawn on copies of the original Contract Drawings. Drawings are to be furnished as a minimum of (2) black line plots along with a CD-ROM with electronic drawing files.

1.07 COOPERATION BETWEEN TRADES

A. Each Subcontractor shall cooperate with all other Subcontractors. Each Subcontractor shall check, prior to commencement of work, for space requirements with all other Subcontractors Relocation of ducts, piping, etc., which may alter the architectural or structural construction must be reviewed by the Architect prior to relocation. No extra compensation will be allowed for Work resulting from these changes.

1.08 CARTING AND HANDLING

A. The Contractor shall furnish his own carting, handling and erecting of equipment and/or material included in this Contract.

1.09 DRAWINGS

A. The Drawings and details shall be taken as a diagrammatic means of installing piping, ductwork and other equipment. They are not intended to show every fitting and offset, nor every structural, electrical, piping or ductwork conflict that may be encountered during the installation of the Work. The Contractor shall be responsible to provide all additional duct or pipe fittings required to install the Work shown on the Drawings.

B. Consult all other Drawings included as part of this Project. The Drawings show the general arrangement of all piping, conduit and equipment. Examine the Drawings and Specifications carefully and notify the Architect by letter of any discrepancies so same can be rectified at the earliest possible date. The Contractor shall follow the Drawings as closely as possible for installation of all piping, ductwork and equipment.

C. The Contractor shall coordinate his work with all architectural, structural, electrical and mechanical features of the building.

D. Should conditions necessitate any rearrangement of piping, ductwork or equipment, or if same can be run to better advantage, the Contractor shall prepare and submit Drawings showing the changes before proceeding with the Work. If such changes are accepted, they shall become a part of this Contract after their approval.

E. Due to the small scale of the Drawings, it is not possible to show all offsets, and detail every point at which exigencies of construction may require special attention. Additional fittings, valves, traps, vacuum breakers, ducts, and other appurtenances necessary due to field conditions or Code requirements shall be furnished and installed by the Contractor at no additional cost to the Owner.

1.10 SITE AND JOB CONDITIONS

A. The Contractor shall review all other Drawings and coordinate the Work with same. No additional compensation shall be allowed for changes to adapt Work to coordinate with Work shown on other Drawings.

B. All dimensions, locations of equipment and connections to external utilities shall be reviewed in field prior to construction. The Architectural plans will hold precedence over mechanical plans as to location of partitions, etc. All construction dimensions shall be coordinated with the Architectural Drawings where discrepancies may exist.

1.11 MODIFICATIONS TO EXISTING EQUIPMENT

A. All existing equipment including piping and ductwork affected by this Project shall be treated as new.

B. The Contractor shall be responsible to provide new insulation and hangers for all existing equipment, piping and ductwork to remain.

C. Existing insulation and hangers may remain if the insulation and hangers comply fully with all provisions of the Project Manual and Contract Drawings.

D. The Contractor shall be responsible to provide new belts and sheaves for existing equipment as required to provide the airflow quantities shown on the Drawings for each piece of existing equipment.

E. The Contractor shall be responsible for all modifications required for all existing pumps to provide the water flow quantities shown on the Drawings. These modifications shall include, but shall not be limited to, replacement or modifications of existing impellers and replacement of all gaskets and seals required to modify the existing pumps.

F. All existing refrigeration equipment affected by this project shall be modified and or removed in conformance with all applicable Codes and Regulations. All refrigerant in such units shall be reclaimed and reused or properly disposed.

1.12 INSTALLATION OF EQUIPMENT

A. The Contractor shall be responsible to install all equipment as per the Manufacturer's written recommendations.

B. Due to the small scale of the drawings, not all devices and appurtenances can be shown on the Contract Documents. The Contractor shall include all devices, piping, wiring and other equipment required for a fully functional installation.

C. The Contractor shall be responsible to provide piping diagrams and all other required site specific information to the Equipment Manufacturer for review prior to installation of the equipment or any of the associated piping or devices.

D. All devices requiring service shall be installed in accessible locations. Access shall be provided at all control valves, isolation valves, control devices and panels, damper operators and motors. All such devices installed above suspended acoustical ceilings with removable pads shall be oriented such that the Manufacturer's recommended clearances are met. The Contractor shall provide access panels at all devices installed above all other ceilings, behind casework and in all other inaccessible locations. The minimum size of the access panels shall be 18"x18". Access panels shall be fire rated where installed in fire rated construction. Color of panels shall be as selected by the Architect.

E. The Contractor shall be responsible to provide all modifications to all equipment required to connect the equipment to the required electrical feeds. These modifications shall include, but shall not be limited to, replacement of wiring lugs required to fit power or control wiring and the installation of additional wiring or conduits.

F. Any modifications to the Work shown on the Contract Documents (including, but not limited to, additional devices, modifications to electrical feeds or modifications to piping sizes) required by the Equipment Manufacturer shall be provided by the Contractor. No additional compensation will be allowed for any modifications required by the Manufacturer for a fully functional installation.

1.13 FLOOR AND WALL PENETRATIONS

A. All floor and wall penetrations for all equipment including ductwork, piping, conduit, etc. shall be sealed. Sealant used shall be applied to both sides of penetration.

B. Rating of sealant used shall meet or exceed the UL fire rating of the floor or wall assembly.

C. Sealants shall remain flexible throughout the entire temperature and expansion range of the affected system.

D. All sealants used shall be fully plenum rated and shall have a flame spread rating of less than 25 and a smoke developed rating of not more than 50.

E. Insulation, where applied, shall be continuous through wall or floor penetration. Insulation thickness and vapor barrier integrity shall also remain continuous through penetration.

1.14 ACCEPTABLE BASE BID MANUFACTURERS

A. The Contract Documents have been prepared for the installation of the equipment scheduled on the Drawings. Acceptable Base Bid Manufacturers have been included in the Project Manual.

B. The Contractor shall be responsible to provide all modifications to the Work shown on the Drawings required for the installation of equipment provided by the Acceptable Base Bid Manufacturers. These modifications shall include, but shall not be limited to, electrical feeds, pipe sizes, support structure, etc.

C. All required modifications shall be coordinated by the Contractor prior to submitting the Bid. No additional compensation shall be allowed for any changes to the Work shown on the Drawings required for any equipment provided by an Acceptable Base Bid Manufacturer.

1.15 MINIMUM EFFICIENCY REQUIREMENTS

A. All new mechanical equipment shall be in conformance with all requirements of the latest edition of ASHRAE 90.1. Provide Manufacturer's certification for review prior to purchase of any equipment.

B. All materials (ductwork, piping, insulation, etc.) shall be installed in conformance with the 2015 version of the International Energy Code.

1.16 UTILITY COSTS

A. The Contractor shall include in his Contract all utility and local building department charges for providing temporary and permanent gas services for the building.

1.17 PROTECTION

A. The Contractor shall keep all pipe and duct openings closed by means of plugs or caps to prevent entrance of foreign matter and shall cover all fixtures, equipment and apparatus as required to protect them against dirt, water, chemical or mechanical damage before, during and after installation. Any such fixtures, equipment or apparatus damaged prior to final acceptance of the Work shall be restored to its original condition or replaced by the Contractor.

1.18 JURISDICTION OF WORK

A. Whenever it becomes necessary for a Subcontractor to furnish Labor and Materials other than that which is generally accepted by trade agreement or general practices to belong to his particular trade or branch of work, he shall Subcontract such work or branch of work involved.

B. However, if there is an overlapping of trades, practices or trade agreements and a jurisdictional dispute arises to claims of tradesmen of another Subcontractor, and a trade union settlement is made in favor of these tradesmen who claimed the work, he shall perform it at his own expense as if it has been included in his Work. All such Work shall be executed in such a manner that there will be no delay or stoppage of work due to infringement or alleged infringement of trade agreements as to jurisdiction.

1.19 CLEANING

A. The Contractor shall clean premises of all excess construction material and debris caused by the Work at the completion of the Work or at the direction of the Owner, Architect or Owner's agent during the course of the Project. All equipment provided by the Contractor shall be thoroughly washed down prior award of Substantial Completion.

1.20 INSTRUCTIONS AND TRAINING

A. The Contractor shall instruct the Owner's personnel in the operation and maintenance of equipment installed as part of this Project. In addition, the Contractor shall furnish to the Owner three (3) sets of typewritten instructions. The Contractor shall also furnish to the Owner three (3) sets of equipment maintenance and operations manuals for each item of equipment.

B. In addition to written instructions the Contractor shall provide field instruction as follows.
   1. Mechanical (excluding Temperature Controls), 4 sessions for a total of 16 hours
   2. Temperature Controls, Refer to section 23 09 23.

C. Notify the Architect seven days in advance of all instruction sessions so the Architect can coordinate with the Owner and be present.

D. For each session, the Contractor shall submit a training session log prepared by the Contractor and signed by the Owner and the Contractor. The log shall certify that the above has been satisfactorily completed and that the Owner's copies of manuals and written instruction were on hand at the time of the session.

E. All training sessions shall be video taped and two copies shall be provided to the Owner.

F. The training sessions shall be coordinated by the Contractor with all Subcontractors to avoid numerous trips by the Owner.

1.21 WARRANTY

A. All work shall be guaranteed for two years after Substantial Completion and final acceptance against all defects of material, equipment and workmanship. All defects appearing within two years shall be promptly remedied without further cost to the Owner.

B. All equipment shall be guaranteed to meet specified capacities and to operate within limits of noise level and vibration recommended in the current issue of the ASHRAE Guide and Data Book.

C. Any portion or the work performed by the Contractor that fails within the warranty period shall be repaired or replaced by the Contractor without additional cost to the Owner.

D. Additional specific warranties may be found in other sections of this Specification.

E. Refer to temperature control and electrical specifications for additional specific warranties.

1.22 SYSTEM STARTUP AND COMPLETION

A. The Contractor shall be responsible for the commissioning of the Mechanical Systems as described below.

1. All boilers shall have combustion tests and shall be adjusted to provide for a minimum of 83% combustion efficiency at full load.
2. All strainers shall be cleaned and the pumps shall be checked for proper alignment.
3. All chemical treatment as well as piping cleaning shall be performed and certified analysis reports provided.
4. All air filters on the units shall be changed before the testing and balancing is done.
5. All equipment shall be checked for proper operation.
6. The building shall be baked as follows.
    a. The boiler system shall be set for full heat output and all controls valves shall be set for full heat. The air-handling units shall be set for full air flow and 100% outside air. All exhaust fans shall be enabled. All space temperatures shall be set as high as possible. If the heating system is not completed or weather does not permit the heating system to be operated, the Contractor shall schedule the "baking procedure" during the first week of October or earlier at the Owner's direction.
    b. The air conditioning system(s) shall be started and placed in full operation for a period of 48 hours before the building is occupied.
    c. The procedure as described above shall be operated continuously for 48 hours before the building is occupied.

B. At the completion of the Building Commissioning, the Contractor shall submit start up reports for each piece of equipment. The reports shall include the condition of equipment and inlet and outlet temperatures and flow rates for all applicable fluids.

END OF SECTION

SECTION 23 07 13
DUCT INSULATION

PART 1 GENERAL

1.01 SECTION INCLUDES

A. Duct insulation.

B. Duct liner.

C. Insulation jackets.

1.02 RELATED REQUIREMENTS

A. Section 22 05 53 - PLUMBING IDENTIFICATION.

1.03 REFERENCE STANDARDS

A. ASTM B209 - Standard Specification for Aluminum and Aluminum-Alloy Sheet and Plate; 2014.

B. ASTM B209M - Standard Specification for Aluminum and Aluminum-Alloy Sheet and Plate [Metric]; 2014.

C. ASTM C518 - Standard Test Method for Steady-State Thermal Transmission Properties by Means of the Heat Flow Meter Apparatus; 2010.

D. ASTM C553 - Standard Specification for Mineral Fiber Blanket Thermal Insulation for Commercial and Industrial Applications; 2013.

E. ASTM C612 - Standard Specification for Mineral Fiber Block and Board Thermal Insulation; 2014.

F. ASTM C916 - Standard Specification for Adhesives for Duct Thermal Insulation; 2014.

G. ASTM C1071 - Standard Specification for Fibrous Glass Duct Lining Insulation (Thermal and Sound Absorbing Material); 2012.

H. ASTM E84 - Standard Test Method for Surface Burning Characteristics of Building Materials; 2015a.

I. ASTM E96/E96M - Standard Test Methods for Water Vapor Transmission of Materials; 2014.

J. SMACNA (DCS) - HVAC Duct Construction Standards Metal and Flexible; 2005.

K. UL 723 - Standard for Test for Surface Burning Characteristics of Building Materials; Current Edition, Including All Revisions.

1.04 SUBMITTALS

A. Product Data: Provide product description, thermal characteristics, list of materials and thickness for each service, and locations.

B. Manufacturer's Instructions: Indicate installation procedures necessary to ensure acceptable workmanship and that installation standards will be achieved.

1.05 QUALITY ASSURANCE

A. Manufacturer Qualifications: Company specializing in manufacturing products of the type specified in this section with not less than three years of documented experience.

B. Applicator Qualifications: Company specializing in performing the type of work specified in this section, with minimum 5 years of experience and approved by manufacturer.

1.06 DELIVERY, STORAGE, AND HANDLING

A. Accept materials on site in original factory packaging, labelled with the Manufacturer's identification, including product density and thickness.

B. Protect insulation from weather and construction traffic, dirt, water, chemical, and mechanical damage, by storing in original wrapping.

1.07 FIELD CONDITIONS

A. Maintain ambient temperatures and conditions required by manufacturers of adhesives, mastics, and insulation cements.

B. Maintain temperature during and after installation for minimum period of 24 hours.

PART 2 PRODUCTS

2.01 REGULATORY REQUIREMENTS

A. Surface Burning Characteristics: Flame spread index/Smoke developed index of 25/50, maximum, when tested in accordance with ASTM E84 or UL 723.

2.02 GLASS FIBER WRAP, FLEXIBLE

A. Manufacturers:
   1. Knauf Insulation: www.knaufinsulation.com.
   2. Johns Manville Insulations: www.jm.com
   3. Owens-Corning Fiberglas: www.owenscorning.com.
   4. CertainTeed Corporation: www.certainteed.com.

B. Insulation: ASTM C553; flexible, noncombustible blanket.
   1. Installed 'R' value: 5 at 75 degrees F, when tested in accordance with ASTM C 518.
   2. Insulation density: 1.0 pounds per cubic foot minimum
   3. Maximum Water Vapor Absorption: 5.0 percent by weight.

C. Vapor Barrier Jacket:
   1. Kraft paper with glass fiber yarn and bonded to aluminized film.
   2. Secure with pressure sensitive tape.

D. Vapor Barrier Tape:
   1. Kraft paper reinforced with glass fiber yarn and bonded to aluminized film, with pressure sensitive rubber based adhesive.

2.03 GLASS FIBER, RIGID

A. Manufacturer:
   1. Knauf Insulation: www.knaufinsulation.com.
   2. Johns Manville: www.jm.com.
   3. Owens Corning Corporation: www.ocbuildingspec.com.
   4. CertainTeed Corporation: www.certainteed.com.

B. Insulation: ASTM C612; rigid, noncombustible blanket.
   1. 'K' Value: 0.24 at 75 degrees F, when tested in accordance with ASTM C518.

C. Vapor Barrier Jacket:
   1. Kraft paper with glass fiber yarn and bonded to aluminized film.
   2. Moisture Vapor Permeability: 0.029 ng/Pa s m (0.02 perm inch), when tested in accordance with ASTM E96/E96M.

2.04 JACKETS

A. Aluminum Jacket: ASTM B209 (ASTM B209M).
   1. Thickness: 0.016 inch sheet.
   2. Finish: Smooth.
   3. Joining: Longitudinal slip joints and 2 inch laps.
   4. Fittings: 0.016 inch thick die shaped fitting covers with factory attached protective liner.
   5. Metal Jacket Bands: 3/8 inch wide; 0.015 inch thick aluminum.

2.05 DUCT LINER

A. Manufacturers:
   1. Knauf Insulation: www.knaufinsulation.com.
   2. Johns Manville: www.jm.com.

3. Owens Corning Corporation: www.ocbuildingspec.com.
4. CertainTeed Corporation: www.certainteed.com.

B. Insulation: Incombustible glass fiber complying with ASTM C 1071; flexible blanket, rigid board, and preformed round liner board; with poly vinyl acetate polymer or acrylic polymer shown to be fungus and bacteria resistant by testing to ASTM G 21 impregnated surface and edge coat.
1. Installed 'R' value: 5 minimum at 75 degrees F.
2. Service Temperature: Up to 250 degrees F.
3. Minimum Noise Reduction Coefficients:
a. 1/2 inch Thickness: 0.30.
b. 1 inch Thickness: 0.45.
c. 1-1/2 inches Thickness: 0.60.
d. 2 inch Thickness: 0.70.

C. Adhesive: Waterproof, fire-retardant type, ASTM C916.

D. Liner Fasteners: Galvanized steel, self-adhesive pad with integral head.

PART 3 EXECUTION

3.01 EXAMINATION

A. Verify that ducts have been tested before applying insulation materials.

B. Verify that surfaces are clean, foreign material removed, and dry.

3.02 INSTALLATION

A. Install in accordance with manufacturer's instructions.

B. Install in accordance with NAIMA National Insulation Standards.

C. Insulate all ducts conveying air:
1. Provide insulation with vapor barrier jackets.
2. Finish with tape and vapor barrier jacket.
3. Continue insulation through walls, sleeves, hangers, and other duct penetrations.
4. Insulate entire system including fittings, joints, flanges, fire dampers, flexible connections, and expansion joints.

D. Exterior Applications: Provide rigid fiberglas insulation with vapor barrier jacket. Cover with calked aluminum jacket with seams located on bottom side of horizontal duct section.

E. External Duct Insulation Application:
1. Secure insulation with vapor barrier with wires and seal jacket joints with vapor barrier adhesive or tape to match jacket.
2. Secure insulation without vapor barrier with staples, tape, or wires.
3. Install without sag on underside of duct. Use adhesive or mechanical fasteners where necessary to prevent sagging. Lift duct off trapeze hangers and insert spacers.
4. Seal vapor barrier penetrations by mechanical fasteners with vapor barrier adhesive.
5. Stop and point insulation around access doors and damper operators to allow operation without disturbing wrapping.

F. Duct and Plenum Liner Application:
1. Adhere insulation with adhesive for 90 percent coverage.
2. Secure insulation with mechanical liner fasteners. Refer to SMACNA (DCS) for spacing.
3. Seal and smooth joints. Seal and coat transverse joints.
4. Seal liner surface penetrations with adhesive.
5. Duct dimensions indicated are net inside dimensions required for air flow. Increase duct size to allow for insulation thickness.
6. Metal nosings or sleeves shall be installed over exposed duct liner edges that face opposite the direction of airflow.

3.03 SCHEDULES

A. Exhaust and Relief Ducts: 1" thick liner

B. Outside Air Intake Ducts: 3" thick rigid insulation.
   1. Minimum installed R value of 12.

C. Plenums 2" thick wrap.

D. Supply Ducts: 2" thick wrap. 1 1/2" thick liner when exposed in finished spaces.
   1. Minimum installed R value of 6.

E. Return Ducts 1 1/2" thick wrap. 1" thick liner when exposed in finished spaces.

END OF SECTION

SECTION 23 31 00
HVAC DUCTS AND CASINGS

PART 1 GENERAL

1.01 SECTION INCLUDES

A. Galvanized steel ductwork

1.02 RELATED REQUIREMENTS

A. Section 23 07 13 - Duct Insulation: External insulation and duct liner.

B. Section 23 33 00 - Air Duct Accessories.

C. Section 23 37 00 - Air Outlets and Inlets.

1.03 REFERENCE STANDARDS

A. ASTM A36/A36M - Standard Specification for Carbon Structural Steel; 2014.

B. ASTM A653/A653M - Standard Specification for Steel Sheet, Zinc-Coated (Galvanized) or Zinc-Iron Alloy-Coated (Galvannealed) by the Hot-Dip Process; 2015.

C. ASTM B209 - Standard Specification for Aluminum and Aluminum-Alloy Sheet and Plate; 2014.

D. ASTM B209M - Standard Specification for Aluminum and Aluminum-Alloy Sheet and Plate [Metric]; 2014.

E. ASTM E84 - Standard Test Method for Surface Burning Characteristics of Building Materials; 2015a.

F. NFPA 90A - Standard for the Installation of Air-Conditioning and Ventilating Systems; 2015.

G. NFPA 90B - Standard for the Installation of Warm Air Heating and Air-Conditioning Systems; 2015.

H. NFPA 96 - Standard for Ventilation Control and Fire Protection of Commercial Cooking Operations; 2014.

I. SMACNA (DCS) - HVAC Duct Construction Standards Metal and Flexible; 2005.

J. No variation of duct configuration or sizes is permitted except by prior written permission. Size round ducts installed in place of rectangular ducts in accordance with ASHRAE table of equivalent rectangular and round ducts.

1.04 SUBMITTALS

A. Product Data: Provide data for duct materials.

B. Shop Drawings: Indicate duct fittings, particulars such as gages, sizes, welds, and configuration prior to start of work for low and medium pressure class and higher systems.

C. Test Reports: Indicate pressure tests performed. Include date, section tested, test pressure, and leakage rate, following SMACNA (LEAK) - HVAC Air Duct Leakage Test Manual.

D. Project Record Documents: Record actual locations of ducts and duct fittings. Record changes in fitting location and type. Show additional fittings used.

1.05 QUALITY ASSURANCE

A. Manufacturer Qualifications: Company specializing in manufacturing the type of products specified in this section, with minimum three years of documented experience, and approved by manufacturer.

B. Installer Qualifications: Company specializing in performing the type of work specified in this section, with minimum 5 years of documented experience.

1.06 FIELD CONDITIONS

A. Do not install duct sealants when temperatures are less than those recommended by sealant manufacturers.

B. Maintain temperatures within acceptable range during and after installation of duct sealants.

PART 2 PRODUCTS

2.01 DUCT ASSEMBLIES

A. Regulatory Requirements: Construct ductwork to NFPA 90A standards.

2.02 MATERIALS

A. Galvanized Steel for Ducts: Hot-dipped galvanized steel sheet, ASTM A653/A653M FS Type B, with G90/Z275 coating.

B. Joint Sealers and Sealants: Non-hardening, water resistant, mildew and mold resistant.
   1. Type: Heavy mastic or liquid used alone or with tape, suitable for joint configuration and compatible with substrates, and recommended by manufacturer for pressure class of ducts.
   2. VOC Content: Not more than 250 g/L, excluding water.
   3. Surface Burning Characteristics: Flame spread index of zero and smoke developed index of zero, when tested in accordance with ASTM E84.

C. Hanger Rod: ASTM A36/A36M; steel, galvanized; threaded both ends, threaded one end, or continuously threaded.

2.03 DUCTWORK FABRICATION

A. Fabricate and support in accordance with SMACNA (DCS) and as indicated.

B. Provide duct material, gages, reinforcing, and sealing for operating pressures indicated.

C. Construct T's, bends, and elbows with radius of not less than 1-1/2 times width of duct on centerline. Where not possible and where rectangular elbows must be used, provide air foil turning vanes of perforated metal with glass fiber insulation.

D. Provide turning vanes of perforated metal with glass fiber insulation when acoustical lining is indicated.

E. Increase duct sizes gradually, not exceeding 15 degrees divergence wherever possible; maximum 30 degrees divergence upstream of equipment and 45 degrees convergence downstream.

F. Fabricate continuously welded round and oval duct fittings in accordance with SMACNA (DCS).

G. Where ducts are connected to exterior wall louvers and duct outlet is smaller than louver frame, provide blank-out panels sealing louver area around duct. Use same material as duct, painted black on exterior side; seal to louver frame and duct.

2.04 MANUFACTURED DUCTWORK AND FITTINGS

A. Double Wall Insulated Round Ducts: Round spiral lockseam duct with galvanized steel outer wall, perforated galvanized steel inner wall; fitting with solid inner wall.
   1. Manufacture in accordance with SMACNA (DCS).
   2. Insulation:
      a. Thickness: 1.5 inch.
      b. Material: Fiberglass.

B. Flexible Ducts: Two ply vinyl film supported by helically wound spring steel wire.
   1. Pressure Rating: 10 inches WG positive and 1.0 inches WG negative.
   2. Maximum Velocity: 4000 fpm.
   3. Temperature Range: Minus 10 degrees F to 160 degrees F.

PART 3 EXECUTION

3.01 INSTALLATION

A. Install, support, and seal ducts in accordance with SMACNA (DCS).

B. Install in accordance with the manufacturer's written instructions.

C. During construction provide temporary closures of metal or taped polyethylene on open ductwork to prevent construction dust from entering ductwork system.

D. Duct sizes indicated are inside clear dimensions.

E. Seal all longitudinal and transverse joints, seams and connections of all supply, return and exhaust ductwork with welds, gaskets, mastics(adhesives), mastics plus embeded fabric systems or tapes installed in accordance with the manufacturer's installation instructions. Duct sealing shall meet all SMACNA requirements for the pressure clasification of the duct systems as well as the 2015 International Energy Conservation Code.

F. Provide openings in ductwork where required to accommodate thermometers and controllers. Provide pilot tube openings where required for testing of systems, complete with metal can with spring device or screw to ensure against air leakage. Where openings are provided in insulated ductwork, install insulation material inside a metal ring.

G. Locate ducts with sufficient space around equipment to allow normal operating and maintenance activities.

H. All rectangular ductwork shall be installed with the top of the duct tight to the bottom of structure. All transitions shall be made flat on bottom to maintain top of duct elevation relative to structure. Where ducts cross obstructions lower than the surrounding structure, transition duct to be low obstruction and back up tight to structure on both sides of obstruction.

I. All exposed round ductwork shall be double wall spiral wound ductwork unless noted otherwise. Ductwork shall be installed with bottom of duct above the bottom of the surrounding structure.

J. All concealed round ductwork shall be installed with the bottom of duct above the bottom of the surrounding structure.

K. Use crimp joints with or without bead for joining round duct sizes 8 inch and smaller with crimp in direction of air flow.

L. Use double nuts and lock washers on threaded rod supports.

M. Connect terminal units to supply ducts directly or with one foot maximum length of flexible duct. Do not use flexible duct to change direction.

N. Connect diffusers or light troffer boots to low pressure ducts directly or with 3 feet maximum length of flexible duct held in place with strap or clamp.

O. At exterior wall louvers, seal duct to louver frame and install blank-out panels.

3.02 CLEANING

A. Clean duct system and force air at high velocity through duct to remove accumulated dust. To obtain sufficient air, clean half the system at a time. Protect equipment that could be harmed by excessive dirt with temporary filters, or bypass during cleaning.

3.03 SCHEDULES

A. Ductwork Material:
   1. Supply: Galvanized Steel.
   2. Return and Relief: Galvanized Steel.
   3. General Exhaust: Galvanized Steel.
   4. Locker room, pool and dishwasher exhaust: Aluminum

END OF SECTION

SECTION 23 33 00
AIR DUCT ACCESSORIES

PART 1 GENERAL

1.01 SECTION INCLUDES

A. Air turning devices/extractors.

B. Backdraft dampers - metal.

C. Duct access doors.

D. Duct test holes.

E. Fire dampers.

F. Flexible duct connections.

G. Volume control dampers.

1.02 RELATED REQUIREMENTS

A. Section 22 05 48 - Vibration and Seismic Controls for Plumbing Piping and Equipment.

B. Section 23 31 00 - HVAC Ducts and Casings.

C. Section 23 36 00 - Air Terminal Units: Pressure regulating damper assemblies.

D. Section 26 05 83 - Wiring Connections: Electrical characteristics and wiring connections.

1.03 REFERENCE STANDARDS

A. NFPA 90A - Standard for the Installation of Air-Conditioning and Ventilating Systems; 2015.

B. NFPA 92A - Standard for Smoke-Control Systems Utilizing Barriers and Pressure Differences; 2012.

C. SMACNA (DCS) - HVAC Duct Construction Standards Metal and Flexible; 2005.

D. UL 33 - Safety Heat Responsive Links for Fire-Protection Service; Current Edition, Including All Revisions.

E. UL 555 - Standard for Fire Dampers; Current Edition, Including All Revisions.

1.04 SUBMITTALS

A. Product Data: Provide for shop fabricated assemblies including volume control dampers. Include electrical characteristics and connection requirements.

B. Shop Drawings: Indicate for shop fabricated assemblies including volume control dampers.

C. Manufacturer's Installation Instructions: Provide instructions for fire dampers.

1.05 QUALITY ASSURANCE

A. Manufacturer Qualifications: Company specializing in manufacturing the type of products specified in this section, with minimum three years of documented experience.

B. Products Requiring Electrical Connection: Listed and classified by Underwriters Laboratories Inc. as suitable for the purpose specified and indicated.

1.06 DELIVERY, STORAGE, AND HANDLING

A. Protect dampers from damage to operating linkages and blades.

PART 2 PRODUCTS

2.01 AIR TURNING DEVICES/EXTRACTORS

A. Manufacturers:
   1. Krueger: www.krueger-hvac.com.
   2. Ruskin Company: www.ruskin.com.
   3. Titus: www.titus-hvac.com.

B. Multi-blade device with radius blades attached to pivoting frame and bracket, steel construction, with push-pull operator strap.

2.02 BACKDRAFT DAMPERS - METAL

A. Manufacturers:
   1. Louvers & Dampers, Inc: www.louvers-dampers.com.
   2. Nailor Industries Inc: www.nailor.com.
   3. Ruskin Company: www.ruskin.com.

B. Multi-Blade, Parallel Action Gravity Balanced Backdraft Dampers: Galvanized steel, with center pivoted blades of maximum 6 inch width, with felt or flexible vinyl sealed edges, linked together in rattle-free manner with 90 degree stop, steel ball bearings, and plated steel pivot pin; adjustment device to permit setting for varying differential static pressure.

2.03 DUCT ACCESS DOORS

A. Manufacturers:
   1. Nailor Industries Inc: www.nailor.com.
   2. Ruskin Company: www.ruskin.com.
   3. SEMCO Incorporated: www.semcohvac.com.

B. Fabrication: Rigid and close-fitting of galvanized steel with sealing gaskets and quick fastening locking devices. For insulated ducts, install minimum 1 inch thick insulation with sheet metal cover.
   1. Larger Sizes: Provide an additional hinge.

C. Access doors with sheet metal screw fasteners are not acceptable.

2.04 DUCT TEST HOLES

A. Temporary Test Holes: Cut or drill in ducts as required. Cap with neat patches, neoprene plugs, threaded plugs, or threaded or twist-on metal caps.

2.05 FIRE DAMPERS

A. Manufacturers:
   1. Nailor Industries Inc: www.nailor.com.
   2. Pottorff: www.pottorff.com.
   3. Air Balance, Inc.: www.airbalance.com.
   4. Ruskin Company: www.ruskin.com.
   5. Prefco: www.prefco-hvac.com
   6. Arrow United Industries: www.arrowunited.com

B. Fabricate in accordance with NFPA 90A and UL 555, and as indicated.

C. Curtain Type Dampers: Galvanized steel with interlocking blades. Provide stainless steel closure springs and latches for horizontal installations. Configure with blades out of air stream for all applications.

D. Multiple Blade Dampers: 16 gage galvanized steel frame and blades, oil-impregnated bronze or stainless steel sleeve bearings and plated steel axles, 1/8 x 1/2 inch plated steel concealed linkage, stainless steel closure spring, blade stops, and lock. Dampers shall be U.L. listed for use in a dynamic or static system with U.L. velocities up to 2000 fpm and pressures up to 4 inch w.g. Damper sizes shall be limited as set by manufacturers U.L. listing. Fire dampers shall be installed compelte with sleeves and mounting angles in accordance with U.L. 555 and manufacturer's instructions.

E. Fusible Links: UL 33, separate at 160 degrees F with adjustable link straps for combination fire/balancing dampers.

F. All dampers shall be rated for use in dynamic systems unless noted otherwise.

2.06 FLEXIBLE DUCT CONNECTIONS

A. Fabricate in accordance with SMACNA (DCS) and as indicated.

B. Flexible Duct Connections: Fabric crimped into metal edging strip.
   1. Fabric: UL listed fire-retardant neoprene coated woven glass fiber fabric to NFPA 90A, minimum density 30 oz per sq yd.
      a. Net Fabric Width: Approximately 2 inches wide.
   2. Metal: 3 inches wide, 24 gage, 0.0239 inch thick galvanized steel.

2.07 VOLUME CONTROL DAMPERS

A. Manufacturers:
   1. Louvers & Dampers, Inc: www.louvers-dampers.com.
   2. Nailor Industries Inc: www.nailor.com.
   3. Ruskin Company: www.ruskin.com.

B. Fabricate in accordance with SMACNA (DCS) and as indicated.

C. Splitter Dampers:
   1. Blade: Fabricate of single thickness sheet metal to streamline shape, secured with continuous hinge or rod.

D. Quadrants:
   1. Provide locking, indicating quadrant regulators on single and multi-blade dampers.
   2. On insulated ducts mount quadrant regulators on stand-off mounting brackets, bases, or adapters.

PART 3 EXECUTION

3.01 PREPARATION

A. Verify that electric power is available and of the correct characteristics.

3.02 INSTALLATION

A. Install accessories in accordance with manufacturer's instructions, NFPA 90A, and follow SMACNA (DCS). Refer to Section 23 31 00 for duct construction and pressure class.

B. Provide backdraft dampers on exhaust fans or exhaust ducts nearest to outside and where indicated.

C. Provide duct access doors for inspection and cleaning before and after filters, coils, fans, automatic dampers, at fire dampers, combination fire and smoke dampers, and elsewhere as indicated. Provide minimum 8 x 8 inch size for hand access, size for shoulder access, and as indicated. Provide 4 x 4 inch for balancing dampers only. Review locations prior to fabrication.

D. Provide duct test holes where indicated and required for testing and balancing purposes.

E. Provide fire dampers at all indicated locations and at all duct and transfer opening penetrations through rated wall, floor and ceiling construction. The Contractor shall be responsible to refer to all Drawings included as part of this Project. Fire dampers shall be provided at all rated construction shown on either the Mechanical or Architectural drawings whether or not the fire ratings or dampers are shown on the Mechanical Drawings.

F. Install all fire dampers in accordance with UL 555. Provide all required perimeter mounting angles, sleeves, breakaway duct connections, corrosion resistant springs, bearings, bushings and hinges.

G. Demonstrate re-setting of fire dampers to the Owner's representative.

H. At fans and motorized equipment associated with ducts, provide flexible duct connections immediately adjacent to the equipment.

I. At equipment supported by vibration isolators, provide flexible duct connections immediately adjacent to the equipment.

J. Provide balancing dampers at points on supply, return, and exhaust systems where branches are taken from larger ducts as required for air balancing. Install minimum 2 duct widths from duct take-off.

K. Use splitter dampers only where indicated.

L. Provide balancing dampers on high velocity systems where indicated. Refer to Section 23 36 00 - Air Terminal Units.

M. Provide balancing dampers on duct take-off to diffusers, grilles, and registers, regardless of whether dampers are specified as part of the diffuser, grille, or register assembly.

END OF SECTION

SECTION 26 00 10
BASIC ELECTRICAL REQUIREMENTS

PART 1 GENERAL

1.01 GENERAL CONDITIONS

A. The General Conditions of the Contract for the Construction of Buildings, Standard Form of the American Institute of Architects current edition, The Supplementary General Conditions and the Mechanical and Electrical Special Conditions are a part of these specifications.

1.02 WORK INCLUDED

A. Basic Electrical Requirements are specifically applicable to Divisions 26, 27 & 28.

B. This specification and accompanying plans cover and shall govern the installation of a complete electrical system, all as specifically set forth herein, and as indicated in the plans.

C. The drawings and these specifications are complementary each to the other, and what is called for by one shall be as binding as if called for by both. They are intended to include everything requisite and necessary to the entire finishing of the work notwithstanding that every item necessarily required by such work is not especially mentioned or shown.

D. This Contractor shall furnish all labor and material necessary for the complete system and items of work including (but not limited to):
   1. All work complaint with the latest edition of the National Electrical Code and the National Fire Alarm and Signaling Code
   2. Minor Electrical Demolition
   3. Building Wire and Cable
   4. Cutting, Patching, Sleeves, Hanges and Support
   5. Conduit
   6. Boxes
   7. Identification for Electrical Systems
   8. Equipment wiring
   9. Extension/Modification of Existing Fire Alarm and Detection System (Addressable)

E. Contractor will distinctly understand that the work described herein is to be a finished job, and the whole completed in a workmanlike manner. The omission from either the drawings or specifications of minor details which ordinarily form a part of first class work of this character and are necessary to the completion of this project as contemplated and described, shall not be a cause for any extra cost, but shall be included by this Contractor as if specifically mentioned or shown.

1.03 REFERENCES

A. Materials, equipment and installation thereof shall conform to the latest editions of the following:
   1. ANSI - American National Standards Institute
   2. ASTM - American Society for Testing Materials
   3. CBM - Certified Ballast Manufactueres
   4. ETL - Electrical Testing Laboratories
   5. IEEE - Institute of Electrical and Electronic Engineers
   6. NBS - National Bureau of Standards
   7. NEMA - National Electrical Manufacturer's Association
   8. NFPA - National Fire Protection Association
   9. OSHA - Occupation Safety and Health Act.
   10. UL - Underwriters Laboratores
   11. BOCA - Building Officials & Code Administrators International, Inc.
   12. IES - Illuminating Engineering Society of North America

13. NFPA 70 - National Electrical Code: Most Recent Edition Adopted by Authority Having Jurisdiction, Including All Applicable Amendments and Supplements.
14. All materials, equipment, and installation thereof shall conform to the standards of the National Electrical Manufacturers Association (NEMA) and of the Underwriters' Laboratories (UL)

B. Notify the Architect/Engineer of any materials or apparatus believed to be inadequate, unsuitable, in violation of laws, ordinances, rules or regulations of authorities having jurisdiction.

C. In every installation where regulations of electric utility and telephone companies apply, conformance with their regulations is mandatory and any costs involved shall be included in the Contract, with the exception of extra facility and other charges which are directly paid by the Owner. or as otherwise instructed herein.

1.04 SUBMITTALS

A. Submit under provisions as described within the general requirements section.

B. Proposed Products List: Include Products specified in each Division 26, 27 & 28 Section:

C. Submit shop drawings and product data grouped to include complete submittals of related systems, products and accessories in a single submittal.

D. Mark dimensions and values in units to match those specified.

E. Contractor shall review all shop drawings prior to submitting them for Architect/Engineer's review. Contractor shall stamp each shop drawing to certify that he has reviewed it. Engineer will not check any drawings that Contractor has not stamped with his review certification.

F. Owner's representative shall review all materials, equipment, fixtures, motor control centers, panelboards, control panels, etc., and other appurtenances provided for this work before proceeding with the purchase and installation.

G. All submittals shall include adequate descriptive literature, catalog cuts, shop drawings and other data necessary for the Owner's Representative to ascertain that the proposed equipment/fixtures and materials comply with specification requirements. Catalog cuts submitted for approval shall be legible and clearly identify equipment/fixtures being submitted.

H. Submittals for individual system and equipment assemblies which consist of more than one item or component shall be made for the system as a whole. Where necessary, submit plans of the system drawing on sheet sizes same as the contract drawings. Partial submittals will not be considered for approval.

I. Owner's Representative review of shop drawings will be rendered as a service only and shall not be considered as a guarantee of measurements or of building conditions, nor shall it be construed as relieving the Contractor of basic responsibilities under his contract.

J. If the shop drawings show variations from contract requirements because of shop practice or other reasons, Contractor shall make specific reference to such variation in his letter of transmittal in order that, of acceptable, suitable action may be taken for proper adjustment; otherwise Contractor will not be relieved of the responsibility for executing the work in accordance with contract documents even though such shop drawings have been reviewed.

K. All shop drawings shall be submitted to permit Owner's Representative ample time to review before material is released for delivery to job.

L. Contractor shall maintain a permanent file of shop drawings to turn over to Owner's Representative at completion of project.

M. Submitals shall include 1/4" = 1'-0" dimensioned drawings of all electrical equipment rooms for review before installation continues.

N. Coordination and Record Drawings:
1. In addition to the preparation and submittal of shop drawings and product data for manufactured electrical equipment and materials, prepare and maintain in current status,

a complete set of detailed, completely circuited, and dimensioned electrical record drawings for electrical work included under the Contract.

2. In addition to the floor and ceiling plans, layouts of all functionally critical areas and congested areas, such as mechanical and electrical equipment rooms. shall be drawn at a minimum scale of 1/4" equals 1'-0" with all details of construction shown.
3. Record drawings shall be made under the direction and supervision of the Contractor and shall show all electrical work inclusive of conduit, wiring, electrical equipment and devices, lighting fixture locations and elevations, points where conduit enters or leaves structural slabs and walls, junction boxes, conduit supports and inserts. The complete electrical distribution system from source or sources up to and including each branch circuit panelboard shall be shown and dimensioned exactly as installed, with all feeders located on plan. Major equipment and apparatus shall be shown to scale and properly located. Drawings shall also show locations and depths of underground conduits and ducts and their terminations, as installed.
4. Coordination drawings shall be made on 3 mil mylar sheets or CAD drawing compatible with AutoCAD Version 14.0 of the same size and with the same border lines and title blocks as the Architect/Engineer's Drawings, with the Contractor's name added.
5. Coordinate electrical work with the work of other trades and in preparing the record drawings, check the work of other trades in order to avoid possible installation conflicts arising therefrom. In the event of conflicts of interferences that cannot be resolved in the field, request a written clarification from the Architect/Engineer.
6. Record drawings shall indicate the electrical installation exactly as constructed and shall be periodically revised to reflect all changes, including those required by the Architect/Engineer, those which are or have been found necessary in the field and those which may be suggested by the Contractor and accepted by the Architect/Engineer. Drawings shall be revised when considered necessary the the Architect/Engineer or the Contractor in order to facilitate proper coordination.
7. If, in the opinion of the Architect/Engineer, the drawings are in acceptable condition after each has been finally revised, they may be submitted as the field record drawings.

O. Equipment Drawings:
1. Provide complete set of shop drawings bound in permanent binder.
2. Provide typewritten list of each type, quantity and manufacturer of lamp installed.
3. Provide typewritten list of each type, quantity, size and manufacturer of fuse, motor overload heater, etc., installed.
4. Provide a complete list of all replaceable components for maintenance purposes.

P. Maintenance and Operating Manuals
1. Maintenance and Operation Manual, submit as required for systems and equipment specified in the technical sections. Furnish five (5) copies, bound in hardback binders, manufacturer's standard binders or an approved equivalent. Furnish one complete manual as specified in the technical section, but in no case later than prior to performance of systems or equipment test, and furnish the remaining manuals prior to contract completion.
2. Inscribe the following identification on the cover: the works "MAINTENANCE AND OPERATION MANUAL", the name and location of the system, equipment, building, name of Contractor and contract number. Include in the manual the names, addresses and telephone numbers of each subcontractor installing the system or equipment and the local representatives for the system or equipment.
3. Provide a "Table of Contents" and assemble the manual to conform to the table of contents, with tab sheets placed before instructions covering the subject. The instructions shall be legible and easily read, with large sheets of drawings folded in.
4. The manual shall include:
   a. Internal and interconnecting wiring and control diagrams with data to explain detailed operation and control of the equipment.

b. A control sequence describing start-up, operation and shutdown.
c. Description of the function of each principal item of equipment.
d. Installation and maintenance instructions.
e. Safety precautions.
f. Diagrams and illustrations.
g. Testing methods.
h. Performance data.
i. Lubrication schedule including type, grade, temperature range and frequency.
j. Pictorial "exploded" parts list with part numbers. Emphasis shall be placed on the use of special tools and instruments. The list shall indicate sources of supply, recommended spare parts and name of servicing organization.
k. Appendix; list qualified permanent servicing organizations for support of the equipment, including addresses and certified qualifications.

Q. POSTED OPERATING INSTRUCTIONS

1. Furnish approved operating instructions for systems and equipment indicated in the technical sections for use by operation personnel. The operating instructions shall include wiring diagrams, control diagrams and controls sequence for each principal system and equipment. Print or engrave operating instructions and frame under glass or in approved laminated plastic. Post instructions were directed. Attach or post operating instructions adjacent to each principal system and equipment including start-up, operating, shutdown, safety precautions and procedure in the event of equipment failure. Provide weather-resistant materials or weatherproof enclosures for operating instructions exposed to the weather. Operating instructions shall not fade when exposed to sunlight and shall be secured to prevent easy removal.

1.05 REGULATORY REQUIREMENTS

A. The work shall be performed in accordance with codes, laws, and ordinances of Federal, State and local governing bodies having jurisdiction.

B. In case of differences between building codes, Federal and State laws, local ordinaces and utility company regulations and the Contract Documents, the most stringent shall govern.

C. Electrical: Conform to the latest edition of NFPA 70 (National Electrical Code)

D. Fire Alarm: Conform to the latest edition of NFPA 72 (National Fire Alarm and Signaling Code)

E. Obtain permits and request inspections from authority having jurisdiction.

F. Obtain approvals, where required, from inspection authorities for exit, emergency lighting, fire alarm device locations, and other electrical installations requiring specific approval. Prints of the Electrical Drawings, for this purpose, will be furnished by the Architect on request. Required wiring diagrams shall be provided and submitted for approval by the Contractor. Copies of the final approved drawings shall be delivered to the Architect. Approvals shall be obtained before commencement of related work.

G. Pay all fees, and other charges incident to electrical work and obtain and pay for required insurance, permits, licenses, and inspections. Arrange for all required inspections and deliver certificates and approval for same to the Architect, as a requirement for final payment.

1.06 PROJECT/SITE CONDITIONS

A. The drawings furnished in the bid set are to give the general intent of the mechanical and electrical requirements. All information for installation is not shown and is not fully coordinated with Architectural and Mechanical drawing and specifications. They are not intended as final installation drawings, although they may be used as a guide if the Contractor feels that sufficient information for installation is shown. Installation must be fully coordinated with all trades. If it is necessary to clarify or provide more detail than is shown, this Contractor shall prepare drawings and submit the same for review and comment.

B. Carefully examine the contract documents, visit the site, and thoroughly become familiar with the local conditions relating to the work. Failure to do so will not relieve the contractor of the Contract.

C. Install Work in locations shown on Drawings, unless prevented by Project conditions.

D. Prepare drawings showing proposed rearrangement of Work to meet Project Conditions, including changes to Work specified in other Sections. Obtain permission of Architect/Engineer before proceeding.

1.07 CONTRACTOR'S RESPONSIBILITY TO VERIFY EQUIPMENT DIMENSIONS

A. Before ordering any materials or proceeding with the work, this Contractor shall verify all measurements at the site and be responsible for correctness of same. No extra compensation will be allowed because of difference between the actual measurements and dimensions indicated on the drawings. Any difference which may be found shall be submitted to the Architect's Superintendent on the job for rectification before proceeding with the work.

B. Contractor and/or manufacturer shall verify that the capacity and duty specified meets the characteristics of the equipment he submits for review.

C. If equipment is submitted for review and does not meet the physical size or arrangement of what was scheduled and specified, Contractor shall pay for all alternations required to accommodate such equipment at no additional cost to the Owner. Contractor shall also pay all costs for additional work required by other Contractors, Owner, Architect or Engineer to make changes which would allow the equipment to fit the space.

1.08 CONTRACTOR'S RESPONSIBILITY TO VERIFY EXISTING CONDITIONS AND OPENINGS

A. Contractor shall field verify the size of existing openings, windows, doors, corridors, rooms, etc. for access of the new equipment into the existing building. If openings are too small for access, then Contractor shall provide new or enlarged openings, at his own expense, to facilitate entrance into existing space or building. Contractor may elect to order the equipment disassembled and/or with split housing for entrance into the existing space or building. Contractor shall reassemble equipment after it is in the space at his own expense.

1.09 OCCUPANCY ADJUSTMENTS

A. Provide on-site assistance in testing and verification of systems for this project to meet occupancy conditions.

B. Provide up to three on-site assistance visits within one year of Substantial Completion.

PART 2 PRODUCTS

2.01 MATERIALS AND EQUIPMENT

A. Proposal shall be based upon the furnishing of all materials and equipment as specified, which in every case shall be new and, where not specifically referred to by manufacturer's name, of the best grade and quality available.

B. Materials used through this installation shall be new (without blemish or defect) and the best of their respective kind and the same shall be installed in a neat, accurate, and workmanlike manner, and in a manner to permit the work of other trades to also be installed wherever the work covered by this specification meets with, or must be considered, in connection with the work of other trades working on this installation. Equipment shall not be used for temporary light and power purposes, including lamps. This workmanship and these materials must be executed and furnished in a manner entirely satisfactory to the Owner's Representative.

C. Items of equipment of within a specificy category type (such as fuses, conduit, electrical distribution equipment [distribution switchboards, panelboards, motor starters, enclosed switches] wiring systems), shall be the product of one manufacturer throughout, unless otherwise indicated or accepted by the Architect/Engineer.

D. Where two types of similar equipment are specified or shown on the drawings, the Base Bid will be based on the higher quality or greater number. All work shown on the drawings & specifications will be adjusted to comply with all sections of the Local Codes.

E. Wherever in the specifications, a particular article or material is definitely mentioned, it shall be provided and no substitutions shall be allowed, especially insofar as the submittal of the base bid is concerned. Should this Contractor desire to substitute other materials for those specified, he may submit these substitutions in the form of voluntary alternates to the base bid, designating appropriate additions or deductions for each alternate. Should no alternates be submitted, the contract shall be entered into on the basis of the specified base bid equipment. Final review of equipment shall be by the Owner's Representative. Voluntary alternates will only be recognized at the time of bid.

F. A specification item followed by one (1) or more manufacturers; names of other manufacturers may be submitted for review to the Owner's Representative a minimum of seven (7) days prior to receiving bids. Acceptance will be granted only if issued by addendum (no exceptions).

G. A specification item followed by one (1) or more manufacturers and "or equal" is open to all equal products or materials. However, Contractor shall supply one (1) of the listed manufacturers at no additional cost if Owner's Representative determines substituted product unsatisfactory.

PART 3 EXECUTION

3.01 DELIVERY AND STORAGE

A. Receive, handle, and store electrical items and materials at the project site. Materials and electrical items shall be so placed that they are protected from damage and deterioration. Damaged or othjerwise unsuitable materials and electrical items shall be immediately removed from the site.

3.02 INSTALLATION

A. The Drawings for work under Divisions 26, 27 & 28 are diagrammatic and are intended to convey the scope of work and indicate the general arrangement of conduit, boxes, equipment, devices, fixtures and other work included in the Contract.

B. Location of items required by the Drawings or specifications not fixed by dimensions are approximate only and exact locations necessary to secure the best conditions and results shall be determined at the site and shall be subject to the approval of the Architect/Engineer. The Contractor shall be responsible for exact/final location and coordination of all devices and in case any devices are not installed in correct location, Contractor shall move same including all necessary cutting and patching at Contractor's expense.

C. Owner reserves right to change position of any/all devices or fixtures within 10'-0" radius before work is installed without extra charge.

D. Check with Heating Contractor as to location of radiation, Ventilation Contractor as to location of ducts and grilles, and Plumbing Contractor as to location of piping before installing the work.

E. Contractor shall consult with the Architect and review the plans to verify the exact locations of all outlets and mounting heights to insure that all outlets are above counters where cabinet work and/or furniture occurs and switches are at the correct side of door swings.

F. This Contractor shall consult with the Equipment Suppliers for the correct sizes of all outlets in sufficient time before wall construction.

G. Follow drawings in layout out work, check drawings of other trades to verify spaces in which work will be installed, and maintain maximum headroom and space conditions at all points.

H. Where headroom or space conditions appear inadequate, the Architect/Engineer shall be notified before proceeding with installation.

I. Minor conduit rerouting and changes shall be made at no additional cost to the Owner.

J. Whenever it becomes necessary for the complete fulfillment of this specification to furnish labor or materials, other than that which is generally accepted by trade agreement or general practice to belong to his particular trade or branch of work, he shall sublet such work or shall employ workmen regularly employed, to the end that there will be no delay or stoppage of work due to infringement or alleged infringement of trade agreements as to jurisdiction.

K. Perform all work with skilled mechanics of the particular trade involved in a neat and workmanlike manner.

L. Furnish other trades advance information on locations and sizes of frames, boxes, sleeves and openings needed for the work, and also furnish information and shop drawings necessary to permit trades affected to install their work properly and without delay.

M. Where there is evidence that work of one trade will interfere with the work of other trades, all trades shall assist in working out space allocations to make satisfactory adjustments and shall be prepared to submit and revise coordinate shop drawings.

N. With the approval of the Architect/Engineer and without additional cost to the Owner, make minor modifications in the work as required by structural interferences, by interferences with work of other trades or for proper execution of the work.

O. Work installed before coordinating with other trades so as to cause interference with the work of such other trades shall be changed to correct such condition without additional cost to the Owner and as directed by the Architect/Engineer.

P. Equipment shall be installed with adequate space allowed for removal, repair or changes to equipment. Ready accessibility to removable parts of equipment and to wiring shall be provided without moving other equipment which is to be installed or which is in place. Electrical Contractor shall verify measurements. Discrepancies shall be brought to the Architect/Engineer's attention for interpretation.

Q. Determine temporary openings in the buildings that will be required for the admission of apparatus furnished under this Division, and notify the Architect/Engineer accordingly. In the event of failure to give sufficient notice in time to arrange for these openings during construction, assume all costs of providing such openings thereafter.

R. Location of electrical outlets, lighting panels, cabinets, equipment, etc. is approximate and exact locations shall be determined at the project.

S. Electrical Contractor shall refer to contract documents for details, reflected ceiling plans, and large scale drawings.

T. Equipment shall be installed with ample space allowed for its removal for repairs or changes. Ready accessibility to removable parts of equipment and to wiring shall be provided so that other equipment, in place or to be installed, need not be moved at any time.

U. Sufficient access for the installation of electrical equipment shall be determined prior to delivery.

V. Compare all contract drawings and specifications to determine the intent of the two together. In case of any discrepancy between the drawings and specifications, the matter shall be referred to the Owner's Representative before any work is installed. The interpretation of the intent shall rest solely with the Owner's Representative, and his decision shall be considered final.

W. Any changes of the electrical layout necessary to make the work conform to the entire facility as construction, fit the work of other trades or conform to the rules of the city and state and/or other regulating bodies (Public Health, NFPA, etc.), shall be made without additional cost.

X. Omission in the contract drawings and/or specifications of any items necessary for the proper completion or operation of the work outlined in this specification shall not relieve the Contractor from furnishing same without additional cost.

Y. WORK BY OTHERS

1. Except as otherwise noted or specified, this Contractor shall not include the following apparatus which shall be provided under other contracts: Electric motors will be set on foundation by others, but shall be wired by this Contractor.
2. All apparatus furnished by others to this Contractor shall be carefully protected, neatly connected, and shall be put in first class condition at time it is submitted for acceptance. The Contractor shall receive all equipment, sign for same and be responsible for its safety.
3. This Contractor shall coordinate with controls Contractor to ensure that all starters and equipment are the proper type, have proper interlocks, holding coils, voltage, etc.. This Contractor will check starter overloads with actual motor full load current nameplate rating.
   a. Motors with a marked service factor not less than 1.15 or marked with a temperature rise not over 40degrees C. shall be set at 125%.
   b. All other motors shall be set at 115%.
4. Temperature controls wiring and conduit will be furnished and installed under Heating Contract.
5. Control wiring for all plumbing motors, hot water circulating pumps, domestic hot water recirculating pumps, sump pumps, sewage ejector, etc., will be installed and wired by the Electrical Contractor.

3.03 PROTECTION

A. Protect conduit and wireway openings against the entrance of foreign matter by means of plugs or caps. Cover fixtures, materials, equipment and devices or otherwise protect against damage from any cause, both before and after installation. Fixtures, materials, equipment, or condition or replaced, all at no additional cost to Owner.

B. Equipment shall be inherently safe and moving parts shall be covered with guards.

3.04 COOPERATION

A. Where jurisdictional rules require the assistance of electrical mechanics in the moving and setting of electrically powered equipment, provide such assistance.

B. Where work covered by this section connects to equipment furnished under other sections, verify electrical work involved in the field and make proper connection to such equipment.

3.05 FINAL COMPLETION

A. Work shall be cleaned prior to the date of "substantial completion" as determined by the Owner's Representative.

B. Clean equipment, restore all damaged materials, remove grease, oil, chemicals, paint spots and/or stains, etc., and generally leave the work in A-1 condition.

C. Retouch and/or repaint all factory painted prime and/or finish coats where scratched or damaged. Wherever retouching will not be satisfactory, in the opinion of the Owner's Representative, the Owner's Representative had the option to require complete repainting until the desired appearance is obtained.

D. Lamps, fixtures, lenses, reflectors, etc., shall be cleaned and not sooner than ten (10) days prior to date of substantial completion.

E. Remove from site all tools, equipment, surplus materials, and rubbish pertaining to contract work and include all costs for such removal and disposition. All rubbish left will be removed by Owner and services for same shall be back-charged to Contractor against final payout on contract.

3.06 INSTRUCTIONS AND TRAINING

A. The Contractor shall instruct the Owner's personnel in the operation and maintenance of equipment installed as part of this Project. In addition, the Contractor shall furnish the Owner three (3) sets of typewritten instructions. The Contractor shall also furnish to the Owner three (3) sets of equipment maintenance and operations manuals for each item of equipment.

B. In addition to written instructions the Contractor shall provide field instruction as follows.
   1. Two sessions for a total hours of 8 hours

C. Notify the Architect seven days in advance of all instruction sessions so the Architect can coordinate with the Owner and be present.

D. For each session, the Contractor shall submit a training session log prepared by the Contractor and signed by the Owner and the Contractor. The log shall certify that the above has been satisfactorily completed and that the Owner's copies of manuals and written instruction were on hand at the time of the session.

E. All training sessions shall be video taped and two copies shall be provided to the Owner.

F. The training sessions shall be coordinated by the Contractor with all Subcontractors to avoid numerous trips by the Owner.

3.07 TESTING AND INSPECTIONS

A. Verify motors for proper rotation prior to operation.

B. Test all motor controls for proper operations.

C. Test all duplex receptacles for proper polarity and grounding.

D. Measure, load, and record readings on all feeders, motors, transformers and panelboards, etc. Reconnect panelboard loads as may be necessary to obtain a reasonable balance of loads on all phases. Variation shall not exceed 10% phase to phase.

E. Provide three (3) typewritten copies of the recordings in bound booklets prior to request for final payment.

F. Demonstrate by tests, at the request of the Owner's Representative, the compliance of the installation with these specifications, the drawings, the National Electric Code, and the accepted standards of good workmanship. These tests shall include operation of lights and equipment, continuity of the conduit system, grounding resistances, and insulation resistances on not more than ten (10) representative circuits and any other circuits for which a justifiable reason exists for such tests. All labor and testing equipment for the performance of these tests shall be furnished by the Contractor.

3.08 GUARANTEE

A. Where not specifically described elsewhere within this electrical specification section, the complete electrical system as indicated on the drawings and in these specifications shall be guaranteed by this Contractor for one (1) year from date of final acceptance by the Architect against defective material and workmanship. Defective workmanship and material developing during the guarantee period shall be repaired or replaced by this Contractor without cost to the Owner.

B. Upon receipt of written notice from the Owner or Architect of failure of any part of the guaranteed materials or equipment during the guarantee period, the affected part or parts shall be repaired or replaced with new, by and at the expense of the Electrical Contractor.

C. Make all service calls, replacements, repairs and adjustments during the guarantee period without cost to Owner.

END OF SECTION

SECTION 26 05 05
SELECTIVE DEMOLITION FOR ELECTRICAL

PART 1 GENERAL

1.01 GENERAL CONDITIONS

A. Perform whatever work and provide whatever materials are required in order to remove, reroute, relocate, or in other ways alter the existing work in order to accommodate new work requirements. Such performance as generally outlined herein and as found necessary under field conditions shall be considered as included in the base bid Contract.

B. The Electrical Drawings are generally instructive of the alterations which involve the existing electrical work. It is not intended that such alterations be limited to these instruction.

C. Existing electrical materials and equipment, including lighting fixtures, switches, receptacles, signal lights, speakers, intercom equipment, controls, conduit outlets, fittings, wire cable, and other devices which are removed as a result of the alterations shall remain the property of the Owner and shall be stored on the site as directed. All equipment which the Owner does not want will become the property of this Contractor and will be promptly removed from the site.

D. Various signal, communications, and other services shall remain in service to provide continuous operation for the Owner's functions. No interruptions of any services will be allowed without written approval from the Architect.

E. The building electrical service and/or fire alarm system must be kept in operation at all times during normal operating hours. the only time these services will be interrupted will be after normal hours or on weekends. The owner will be consulted for any interruptions and permission given in writing. Temporary service for heating or sump pumps must be provided for as may be necessary. All overtime or extra cost necessary to provide for the above will be included in the base bid.

1.02 PROLONGED POWER OUTAGE

A. Prolonged power outage shall be defined as any period where electrical power is shut down for a period of four or more hours.

B. Before shutting down building power for a prolonged period, test all existing battery emergency lights and exit signs. Provide written report regarding device status. Failure to do so will imply that all battery units are properly functioning at the beginning of the prolonged power outage.

C. Disconnect all batteries from emergency lights and exit signs before any prolonged power outage.

D. Provide back-up electrical power (emergency generator, UPS unit, or temporary power for construction) for the following loads: fire alarm control panel and all associated notification appliance panels, and intrusion detection system.

E. Upon re-application of electrical power, test all battery emergency lights and exit signs for proper operation. Provide written report regarding device status.

1.03 SECTION INCLUDES

A. Electrical demolition.

1.04 RELATED REQUIREMENTS

A. Section 02 84 00 - Polychlorinate Biphenyl (PCB) Remediation: Removal of equipment and materials containing substances regulated under the Federal Toxic Substances Control Act (TSCA), including but not limited to those containing PCBs and mercury.

PART 2 PRODUCTS

2.01 MATERIALS AND EQUIPMENT

A. Materials and equipment for patching and extending work: As specified in individual sections.

PART 3 EXECUTION

3.01 INSTALLATION

A. GENERAL

1. Remove suspended acoustical ceiling and/or tiles necessary to facilitate the installation of the electrical work indicated on the drawings and specified herein, and restore the ceiling and tiles after completion of the electrical work. Replace any ceiling tiles damaged during the work, with new tiles to match the existing in every respect, without any additional cost to the Owner.
2. Where it is called for in the drawings to provide for circuits as required, it will be the responsibility of the Electrical Contractor to add new circuit breakers to existing spaces, connect to existing spare circuit breakers or provide a new 12 circuit breaker panelboard adjacent to existing panel. Provide main breaker as required for panel protection. Where it is called for in the drawings to connect to existing wiring, lighting, outlets, motor circuits, etc., it will be the Contractor's responsibility to thoroughly check all locations and details during the bid period and provide all necessary appurtenances and equipment to furnish and install all that is necessary.

3.02 EXAMINATION

A. The contractor must visit the site to familiarize himself with the existing site and building conditions which will be affected during construction prior to submitting his bid proposal. Contractor is cautioned that the project is a remodeling job and it is assumed that he has included funds in his bid to cover unforeseen items which must be moved, relocated or adjusted to fit his work. No extra compensation will be allowed.

B. Verify that abandoned wiring and equipment serve only abandoned facilities.

C. Demolition drawings are based on casual field observation and existing record documents.

D. Beginning of demolition means installer accepts existing conditions.

3.03 PREPARATION

A. Contractor shall refer to the Architectural. Mechanical and Electrical Drawings to determine the extent of remodeling work. All new and existing conduits shall be run concealed in areas where new and existing ceilings and dropped soffits finishes are installed. Where channeling and cutting is not feasible, or extremely difficult, finished surface raceway will be used. Where surface is used it must be approved by the Engineer. In some areas, it will be necessary to route the conduit in a manner other than the shortest distance between two outlets in order to maximize the concealment of the work. All cut and/or channeled surfaces will be restored to its original condition by the Electrical Contractor using skilled tradesman ordinarily employed for such specialty.

B. Confer with the manufacturers of existing equipment that is to be revised or extended, and include in the base bid all work necessary of the proper completion of same.

C. The contractor must visit the site to familiarize himself with the existing site and building conditions which will be affected during construction prior to submitting his bid proposal. Contractor is cautioned that the project is a remodeling job and it is assumed that he has included funds in his bid to cover unforeseen items which must be moved, relocated or adjusted to fit his work. No extra compensation will be allowed.

D. Disconnect electrical systems in walls, floors, and ceilings to be removed.

E. Coordinate utility service outages with utility company.

F. Provide temporary wiring and connections to maintain existing systems (heat, fire alarm, etc.) in service during construction. When work must be performed on energized equipment or circuits, use personnel experienced in such operations.

G. Existing Electrical Service: Maintain existing system in service until new system is complete and ready for service. Disable system only to make switchovers and connections. Minimize outage duration.
   1. Obtain permission from Ownerat least 24 hours before partially or completely disabling system.
   2. Make temporary connections to maintain service in areas adjacent to work area.

H. Existing Fire Alarm System: Maintain existing system in service until new system is accepted. Disable system only to make switchovers and connections. Minimize outage duration.
   1. Notify Owner before partially or completely disabling system.
   2. Notify local fire service.
   3. Make notifications at least 24 hours in advance.
   4. Make temporary connections to maintain service in areas adjacent to work area.

I. Existing Telephone System: Maintain existing system in service until new system is complete and ready for service. Disable system only to make switchovers and connections. Minimize outage duration.
   1. Notify Owner at least 24 hours before partially or completely disabling system.
   2. Notify telephone utility company at least 24 hours before partially or completely disabling system.
   3. Make temporary connections to maintain service in areas adjacent to work area.

3.04 DEMOLITION AND EXTENSION OF EXISTING ELECTRICAL WORK

A. Where existing electrical work must be removed as a result of the alterations, it shall be completely removed, back to the first outlet which is left unaffected by the revision. All conduit, wire, supports, hangers, etc., are included under this requirement. Conduit which is buried in concrete or otherwise inaccessible positioned may be abandoned. In such cases, all wire shall be pulled out of conduit and conduit itself plugged at each end.

B. Remove or reroute all electrical feeders, risers, branch circuits, and other wiring as required by the alterations or as shown. Circuits serving loads which must remain, shall be rerouted as required, and reconnected to those loads.

C. Remove, relocate, and extend existing installations to accommodate new construction.

D. Remove abandoned wiring to source of supply.

E. Remove abandoned conduit/wiring, including abandoned conduit above accessible ceiling finishes. Cut conduit flush with walls and floors, and patch surfaces.

F. Disconnect abandoned outlets and remove devices. Remove abandoned outlets if conduit servicing them is abandoned and removed. Provide blank cover for abandoned outlets that are not removed.

G. Disconnect and remove abandoned panelboards and distribution equipment.

H. Disconnect and remove electrical devices and equipment serving utilization equipment that has been removed.

I. Disconnect and remove abandoned luminaires. Remove brackets, stems, hangers, and other accessories.

J. Repair adjacent construction and finishes damaged during demolition and extension work.

K. Maintain access to existing electrical installations that remain active. Modify installation or provide access panel as appropriate.

L. Extend existing installations using materials and methods compatible with existing electrical installations, or as specified.

3.05 CLEANING AND REPAIR

A. See Section 01 74 19 - Construction Waste Management and Disposal for additional requirements.

B. Clean and repair existing materials and equipment that remain or that are to be reused.

C. Panelboards: Clean exposed surfaces and check tightness of electrical connections. Replace damaged circuit breakers and provide closure plates for vacant positions. Provide typed circuit directory showing revised circuiting arrangement.

D. Luminaires: Remove existing luminaires for cleaning. Use mild detergent to clean all exterior and interior surfaces; rinse with clean water and wipe dry. Replace lamps, ballasts and broken electrical parts.

END OF SECTION

SECTION 26 05 19

LOW-VOLTAGE ELECTRICAL POWER CONDUCTORS AND CABLES

PART 1 GENERAL

1.01 SECTION INCLUDES

A. Single conductor building wire.

B. Wire and cable for 600 volts and less.

C. Wiring connectors.

D. Electrical tape.

E. Heat shrink tubing.

F. Wire pulling lubricant.

G. Cable ties.

1.02 RELATED REQUIREMENTS

A. Section 26 05 53 - Identification for Electrical Systems: Identification products and requirements.

1.03 REFERENCE STANDARDS

A. ASTM B3 - Standard Specification for Soft or Annealed Copper Wire; 2013.

B. ASTM B8 - Standard Specification for Concentric-Lay-Stranded Copper Conductors, Hard, Medium-Hard, or Soft; 2011.

C. ASTM B33 - Standard Specification for Tin-Coated Soft or Annealed Copper Wire for Electrical Purposes; 2010 (Reapproved 2014).

D. ASTM B787/B787M - Standard Specification for 19 Wire Combination Unilay-Stranded Copper Conductors for Subsequent Insulation; 2004 (Reapproved 2014).

E. ASTM D3005 - Standard Specification for Low-Temperature Resistant Vinyl Chloride Plastic Pressure-Sensitive Electrical Insulating Tape; 2010.

F. ASTM D4388 - Standard Specification for Nonmetallic Semi-Conducting and Electrically Insulating Rubber Tapes; 2013.

G. NECA 1 - Standard for Good Workmanship in Electrical Construction; 2010.

H. NEMA WC 70 - Nonshielded Power Cable 2000 V or Less for the Distribution of Electrical Energy; 2009.

I. NETA ATS - Acceptance Testing Specifications for Electrical Power Equipment and Systems; 2013.

J. NFPA 70 - National Electrical Code: Most Recent Edition Adopted by Authority Having Jurisdiction, Including All Applicable Amendments and Supplements.

K. UL 44 - Thermoset-Insulated Wires and Cables; Current Edition, Including All Revisions.

L. UL 83 - Thermoplastic-Insulated Wires and Cables; Current Edition, Including All Revisions.

M. UL 486A-486B - Wire Connectors; Current Edition, Including All Revisions.

N. UL 486C - Splicing Wire Connectors; Current Edition, Including All Revisions.

O. UL 486D - Sealed Wire Connector Systems; Current Edition, Including All Revisions.

P. UL 510 - Polyvinyl Chloride, Polyethylene, and Rubber Insulating Tape; Current Edition, Including All Revisions.

1.04 ADMINISTRATIVE REQUIREMENTS

A. Coordination:

1. Coordinate sizes of raceways, boxes, and equipment enclosures installed under other sections with the actual conductors to be installed, including adjustments for conductor sizes increased for voltage drop.
2. Coordinate with electrical equipment installed under other sections to provide terminations suitable for use with the conductors to be installed.
3. Notify Engineer of any conflicts with or deviations from the contract documents. Obtain direction before proceeding with work.

1.05 SUBMITTALS

A. Submit under provisions as described within the general requirements section.

B. Product Data: Provide for each cable assembly type.

1.06 QUALITY ASSURANCE

A. Conform to requirements of NFPA 70

B. Maintain at the project site a copy of each referenced document that prescribes execution requirements.

C. Manufacturer Qualifications: Company specializing in manufacturing the products specified in this section with minimum three years documented experience.

1.07 DELIVERY, STORAGE, AND HANDLING

A. Receive, inspect, handle, and store conductors and cables in accordance with manufacturer's instructions.

1.08 FIELD CONDITIONS

A. Do not install or otherwise handle thermoplastic-insulated conductors at temperatures lower than 14 degrees F, unless otherwise permitted by manufacturer's instructions. When installation below this temperature is unavoidable, notify Engineer and obtain direction before proceeding with work.

PART 2 PRODUCTS

2.01 CONDUCTOR AND CABLE APPLICATIONS

A. Do not use conductors and cables for applications other than as permitted by NFPA 70 and product listing.

B. Provide single conductor building wire installed in suitable raceway unless otherwise indicated, permitted, or required.

C. Nonmetallic-sheathed cable is not permitted.

D. Underground feeder and branch-circuit cable is not permitted.

E. Service entrance cable is not permitted.

F. Armored cable is not permitted.
1. Where not otherwise restricted, may be used:
   a. Where concealed above accessible ceilings for final connections from junction boxes to luminaires.
      1) Maximum Length: 6 feet.
2. In addition to other applicable restrictions, may not be used:
   a. Where not approved for use by the authority having jurisdiction.
   b. Where exposed to damage.
   c. For damp, wet, or corrosive locations.

G. Metal-clad cable is not permitted.

2.02 CONDUCTOR AND CABLE MANUFACTURERS

A. Southwire Co.

B. Triangle Wire and Cable.

2.03 CONDUCTOR AND CABLE GENERAL REQUIREMENTS

A. Provide products that comply with requirements of NFPA 70.

B. Provide products listed, classified, and labeled as suitable for the purpose intended.

C. Unless specifically indicated to be excluded, provide all required conduit, boxes, wiring, connectors, etc. as required for a complete operating system.

D. Comply with NEMA WC 70.

E. Thermoplastic-Insulated Conductors and Cables: Listed and labeled as complying with UL 83.

F. Thermoset-Insulated Conductors and Cables: Listed and labeled as complying with UL 44.

G. Conductor Material:
   1. Provide copper conductors only. Aluminum conductors are not acceptable for this project. Conductor sizes indicated are based on copper.
   2. Copper Conductors: Soft drawn annealed, 98 percent conductivity, uncoated copper conductors complying with ASTM B3, ASTM B8, or ASTM B787/B787M unless otherwise indicated.
   3. Tinned Copper Conductors: Comply with ASTM B33.

H. Minimum Conductor Size:
   1. Branch Circuits: 12 AWG.
      a. Exceptions:
         1) 20 A, 120 V circuits longer than 75 feet: 10 AWG, for voltage drop.
         2) 20 A, 120 V circuits longer than 150 feet: 8 AWG, for voltage drop.
         3) 20 A, 277 V circuits longer than 150 feet: 10 AWG, for voltage drop.

I. Conductor Color Coding:
   1. Color code conductors as indicated unless otherwise required by the authority having jurisdiction. Maintain consistent color coding throughout project.
   2. Color Coding Method: Integrally colored insulation.
   3. Color Code:
      a. 480Y/277 V, 3 Phase, 4 Wire System:
         1) Phase A: Brown.
         2) Phase B: Orange.
         3) Phase C: Yellow.
         4) Neutral/Grounded: Gray.
      b. 208Y/120 V, 3 Phase, 4 Wire System:
         1) Phase A: Black.
         2) Phase B: Red.
         3) Phase C: Blue.
         4) Neutral/Grounded: White.
      c. Equipment Ground, All Systems: Green.
      d. Isolated Ground, All Systems: Green with yellow stripe.
      e. Travelers for 3-Way and 4-Way Switching: Pink.
      f. For modifications or additions to existing wiring systems, comply with existing color code when existing code complies with NFPA 70 and is approved by the authority having jurisdiction.

2.04 SINGLE CONDUCTOR BUILDING WIRE

A. Manufacturers:
   1. Copper Building Wire:
      a. Cerro Wire LLC: www.cerrowire.com.
      b. Encore Wire Corporation: www.encorewire.com.
      c. Southwire Company: www.southwire.com.

B. Description: Single conductor insulated wire.

C. Conductor Stranding:
   1. Feeders and Branch Circuits:
      a. Size 10 AWG and Smaller: Solid.
      b. Size 8 AWG and Larger: Stranded.

D. Insulation Voltage Rating: 600 V.

E. Insulation:
   1. Copper Building Wire: Type THHN/THWN or THHN/THWN-2, except as indicated below.
      a. Installed Exterior or Underground: Type XHHW-2.

F. Conductor: Copper.

G. Insulation Voltage Rating: 600 volts.

2.05 WIRING CONNECTORS

A. Description: Wiring connectors appropriate for the application, suitable for use with the conductors to be connected, and listed as complying with UL 486A-486B or UL 486C as applicable.

B. Wiring Connectors for Splices and Taps:
   1. Copper Conductors Size 8 AWG and Smaller: Use twist-on insulated spring connectors.
   2. Copper Conductors Size 6 AWG and Larger: Use mechanical connectors or compression connectors.

C. Wiring Connectors for Terminations:
   1. Copper Conductors Size 8 AWG and Larger: Use mechanical connectors or compression connectors where connectors are required.

D. Twist-on Insulated Spring Connectors: Rated 600 V, 221 degrees F for standard applications and 302 degrees F for high temperature applications; pre-filled with sealant and listed as complying with UL 486D for damp and wet locations.

E. Mechanical Connectors: Provide bolted type or set-screw type.

F. Compression Connectors: Provide circumferential type or hex type crimp configuration.

2.06 WIRING ACCESSORIES

A. Electrical Tape:
   1. Manufacturers:
      a. 3M: www.3m.com.
      b. Plymouth Rubber Europa: www.plymouthrubber.com.
   2. Vinyl Insulating Electrical Tape: Complying with ASTM D3005 and listed as complying with UL 510; minimum thickness of 7 mil; resistant to abrasion, corrosion, and sunlight; conformable for application down to 0 degrees F and suitable for continuous temperature environment up to 221 degrees F.
   3. Rubber Splicing Electrical Tape: Ethylene Propylene Rubber (EPR) tape, complying with ASTM D4388; minimum thickness of 30 mil; suitable for continuous temperature environment up to 194 degrees F and short-term 266 degrees F overload service.
   4. Electrical Filler Tape: Rubber-based insulating moldable putty, minimum thickness of 125 mil; suitable for continuous temperature environment up to 176 degrees F.
   5. Moisture Sealing Electrical Tape: Insulating mastic compound laminated to flexible, all-weather vinyl backing; minimum thickness of 90 mil.

B. Heat Shrink Tubing: Heavy-wall, split-resistant, with factory-applied adhesive; rated 600 V; suitable for direct burial applications; listed as complying with UL 486D.

C. Wire Pulling Lubricant: Listed; suitable for use with the conductors or cables to be installed and suitable for use at the installation temperature.

D. Cable Ties: Material and tensile strength rating suitable for application.

E. Use mechanical compression for 6 AWG or larger or any connection made within any type of exterior junction box or device to include. Cover connector with insulating tape or heat shrinkable insulation equivalent to 150% conductor insulation.

F. Outdoor boxes (Including building mounted boxes used for outdoor devices) and undergroud connections of any type #12 to #6 AWG.
   1. Ideal Weatherproof wire connectors or equal.
      a. Silicon filled wire connectors designed to meet UL 486D standards
      b. Size per manufacturer for number and wire sizes

PART 3 EXECUTION

3.01 EXAMINATION

A. Verify that interior of building has been protected from weather.

B. Verify that work likely to damage wire and cable has been completed.

C. Verify that raceways, boxes, and equipment enclosures are installed and are properly sized to accommodate conductors and cables in accordance with NFPA 70.

D. Verify that raceway installation is complete and supported.

E. Verify that field measurements are as indicated.

F. Verify that conditions are satisfactory for installation prior to starting work.

3.02 PREPARATION

A. Clean raceways thoroughly to remove foreign materials before installing conductors and cables.

3.03 INSTALLATION

A. Circuiting Requirements:
   1. Unless dimensioned, circuit routing indicated is diagrammatic.
   2. When circuit destination is indicated without specific routing, determine exact routing required.
   3. Arrange circuiting to minimize splices.
   4. Maintain separation of Class 1, Class 2, and Class 3 remote-control, signaling, and power-limited circuits in accordance with NFPA 70.
   5. Maintain separation of wiring for emergency systems in accordance with NFPA 70.
   6. Circuiting Adjustments: Unless otherwise indicated, when branch circuits are indicated as separate, combining them together in a single raceway is not permitted.
   7. Common Neutrals: Unless otherwise indicated, sharing of neutral/grounded conductors among up to three single phase branch circuits of different phases installed in the same raceway is not permitted. Provide dedicated neutral/grounded conductor for each individual branch circuit.
   8. Provide oversized neutral/grounded conductors where indicated and as specified below.
      a. Provide 200 percent rated neutral for feeders fed from K-rated transformers.
      b. Provide 200 percent rated neutral for feeders serving panelboards with 200 percent rated neutral bus.

B. Install products in accordance with manufacturer's instructions.

C. Perform work in accordance with NECA 1 (general workmanship).

D. Installation in Raceway:
   1. Tape ends of conductors and cables to prevent infiltration of moisture and other contaminants.
   2. Pull all conductors and cables together into raceway at same time.
   3. Do not damage conductors and cables or exceed manufacturer's recommended maximum pulling tension and sidewall pressure.

4. Use suitable wire pulling lubricant where necessary, except when lubricant is not recommended by the manufacturer.

E. Paralleled Conductors: Install conductors of the same length and terminate in the same manner.

F. Secure and support conductors and cables in accordance with NFPA 70 using suitable supports and methods approved by the authority having jurisdiction. Provide independent support from building structure. Do not provide support from raceways, piping, ductwork, or other systems.
   1. Installation Above Suspended Ceilings: Do not provide support from ceiling support system. Do not provide support from ceiling grid or allow conductors and cables to lay on ceiling tiles.
   2. Installation in Vertical Raceways: Provide supports where vertical rise exceeds permissible limits.

G. Install conductors with a minimum of 12 inches of slack at each outlet.

H. Neatly train and bundle conductors inside boxes, wireways, panelboards and other equipment enclosures.

I. Group or otherwise identify neutral/grounded conductors with associated ungrounded conductors inside enclosures in accordance with NFPA 70.

J. Make wiring connections using specified wiring connectors.
   1. Make splices and taps only in accessible boxes. Do not pull splices into raceways or make splices in conduit bodies or wiring gutters.
   2. Remove appropriate amount of conductor insulation for making connections without cutting, nicking or damaging conductors.
   3. Do not remove conductor strands to facilitate insertion into connector.
   4. Clean contact surfaces on conductors and connectors to suitable remove corrosion, oxides, and other contaminates. Do not use wire brush on plated connector surfaces.
   5. Mechanical Connectors: Secure connections according to manufacturer's recommended torque settings.
   6. Compression Connectors: Secure connections using manufacturer's recommended tools and dies.

K. Insulate splices and taps that are made with uninsulated connectors using methods suitable for the application, with insulation and mechanical strength at least equivalent to unspliced conductors.
   1. Dry Locations: Use insulating covers specifically designed for the connectors, electrical tape, or heat shrink tubing.
      a. For taped connections, first apply adequate amount of rubber splicing electrical tape or electrical filler tape, followed by outer covering of vinyl insulating electrical tape.
   2. Damp Locations: Use insulating covers specifically designed for the connectors, electrical tape, or heat shrink tubing.
      a. For connections with insulating covers, apply outer covering of moisture sealing electrical tape.
      b. For taped connections, follow same procedure as for dry locations but apply outer covering of moisture sealing electrical tape.
   3. Wet Locations: Use heat shrink tubing.

L. Insulate ends of spare conductors using vinyl insulating electrical tape.

M. Color Code Legend: Provide identification label identifying color code for ungrounded conductors at each piece of feeder or branch-circuit distribution equipment when premises has feeders or branch circuits served by more than one nominal voltage system.

N. Install firestopping to preserve fire resistance rating of partitions and other elements, using materials and methods as required.

O. Unless specifically indicated to be excluded, provide final connections to all equipment and devices, including those furnished by others, as required for a complete operating system.

P. Install wire and cable securely, in a neat and workmanlike manner, as specified in NECA 1.

Q. Route wire and cable as required to meet project conditions.
   1. Wire and cable routing indicated is approximate unless dimensioned.
   2. Where wire and cable destination is indicated and routing is not shown, determine exact routing and lengths required.
   3. Include wire and cable of lengths required to install connected devices within 10 ft of location shown.

R. Use wiring methods indicated.

S. Pull all conductors into raceway at same time.

T. Use suitable wire pulling lubricant for building wire 4 AWG and larger.

U. Protect exposed cable from damage.

V. Neatly train and lace wiring inside boxes, equipment, and panelboards.

W. Clean conductor surfaces before installing lugs and connectors.

X. Make splices, taps, and terminations to carry full ampacity of conductors with no perceptible temperature rise.

Y. Identify and color code wire and cable under provisions of Section 26 05 53. Identify each conductor with its circuit number or other designation indicated.

3.04 FIELD QUALITY CONTROL

A. See Section 01 40 00 - Quality Requirements, for additional requirements.

B. Inspect and test in accordance with NETA ATS, except Section 4.

C. Perform inspections and tests listed in NETA ATS, Section 7.3.2. The insulation resistance test is required for all conductors. The resistance test for parallel conductors listed as optional is not required.

D. Correct deficiencies and replace damaged or defective conductors and cables.

E. Perform inspections and tests listed in NETA STD ATS, Section 7.3.2.

END OF SECTION

SECTION 26 05 29
HANGERS AND SUPPORTS FOR ELECTRICAL SYSTEMS

PART 1 GENERAL

1.01 GENERAL CONDITIONS

A. Equipment shall not be held in place by its own dead weight. Base anchor fasteners shall be provided in each case.

B. All cutting and patching of new and/or existing surfaces will be the responsibility of the Electrical Contractor. Surfaces will be restored to its original condition and will be to the satisfaction of the Owner and the Architect. All patching will be by tradesmen normally employed by each specialty and will be paid by the Electrical Contractor.

C. Contractor shall give the Architect complete information as to size of openings in floors, walls, etc., so that such openings may be provided as the building progresses.

D. If openings are omitted or incorrect through failure to follow above instructions, the Contractor shall engage the Contractor for general finishes construction to cut and patch at his own expense to the satisfaction of the Architect.

1.02 SECTION INCLUDES

A. Support and attachment components for equipment, conduit, cable, boxes, and other electrical work.

1.03 REFERENCE STANDARDS

A. ASTM A123/A123M - Standard Specification for Zinc (Hot-Dip Galvanized) Coatings on Iron and Steel Products; 2015.

B. ASTM A153/A153M - Standard Specification for Zinc Coating (Hot-Dip) on Iron and Steel Hardware; 2009.

C. ASTM B633 - Standard Specification for Electrodeposited Coatings of Zinc on Iron and Steel; 2013.

D. MFMA-4 - Metal Framing Standards Publication; 2004.

E. ICC-ES AC01 - Acceptance Criteria for Expansion Anchors in Masonry Elements; 2009.

F. ICC-ES AC106 - Acceptance Criteria for Predrilled Fasteners (Screw Anchors) in Masonry Elements; 2006

G. ICC-ES AC193 - Acceptance Criteria for Mechanical Anchors in Concrete Elements; 2010

H. ICC-ES AC308 - Acceptance Criteria for Post-Installed Adhesive Anchors in Concrete Elements; 2009.

I. NECA 1 - Standard for Good Workmanship in Electrical Construction; 2010.

J. NFPA 70 - National Electrical Code: Most Recent Edition Adopted by Authority Having Jurisdiction, Including All Applicable Amendments and Supplements.

1.04 QUALITY ASSURANCE

A. Conform to requirements of NFPA 70

PART 2 PRODUCTS

2.01 SUPPORT AND ATTACHMENT COMPONENTS

A. General Requirements:
   1. Provide all required hangers, supports, anchors, fasteners, fittings, accessories, and hardware as necessary for the complete installation of electrical work.
   2. Provide products listed, classified, and labeled as suitable for the purpose intended, where applicable.

3. Where support and attachment component types and sizes are not indicated, select in accordance with manufacturer's application criteria as required for the load to be supported. Include consideration for vibration, equipment operation, and shock loads where applicable.
4. Do not use products for applications other than as permitted by NFPA 70 and product listing.
5. Steel Components: Use corrosion resistant materials suitable for the environment where installed.
   a. Zinc-Plated Steel: Electroplated in accordance with ASTM B633.
   b. Galvanized Steel: Hot-dip galvanized after fabrication in accordance with ASTM A123/A123M or ASTM A153/A153M.

B. Conduit and Cable Supports: Straps, clamps, etc. suitable for the conduit or cable to be supported.
   1. Conduit Straps: One-hole or two-hole type; steel or malleable iron.
   2. Conduit Clamps: Bolted type unless otherwise indicated.

C. Outlet Box Supports: Hangers, brackets, etc. suitable for the boxes to be supported.

D. Metal Channel (Strut) Framing Systems: Factory-fabricated continuous-slot metal channel (strut) and associated fittings, accessories, and hardware required for field-assembly of supports.
   1. Comply with MFMA-4.

E. Hanger Rods: Threaded zinc-plated steel unless otherwise indicated.

F. Anchors and Fasteners:
   1. Unless otherwise indicated and where not otherwise restricted, use the anchor and fastener types indicated for the specified applications.

2.02 MATERIALS

A. Expansive screw anchors, shields, or other fastening items containing lead or other material that might loosen or melt under fire conditions shall not be used. No items shall rest on or depend for support on suspended ceiling media (tiles, lath, plaster, splines, etc.).

B. Hangers, Supports, Anchors, and Fasteners - General: Corrosion-resistant materials of size and type adequate to carry the loads of equipment and conduit, including weight of wire in conduit.

C. Sleeves for conduits shall be mild steel tube, galvanized inside and outside, equal to rigid conduit.

D. Supports: Fabricated of structural steel or formed steel members; galvanized angles or channels supported with 3/8" threaded rods anchored to the building construction. Any necessary Unistrut and/or steel to span construction members will be furnished and installed.

E. Anchors and Fasteners:
   1. Do not use powder-actuated anchors, spring clips, or beam clamps.
   2. Concrete Structural Elements: Use precast inserts, expansion anchors, or preset inserts.
   3. Steel Structural Elements: Use beam clamps, steel spring clips, steel ramset fasteners, or welded fasteners.
   4. Concrete Surfaces: Use self-drilling anchors or expansion anchors.
   5. Hollow Masonry, Plaster, and Gypsum Board Partitions: Use toggle bolts or hollow wall fasteners.
   6. Solid Masonry Walls: Use expansion anchors or preset inserts.
   7. Sheet Metal: Use sheet metal screws.
   8. Wood Elements: Use wood screws.

F. Formed Steel Channel:
   1. Product: Unistrut

PART 3 EXECUTION

3.01 INSTALLATION

A. Install products in accordance with manufacturer's instructions.

B. Perform work in accordance with NECA 1 (general workmanship).

C. Provide independent support from building structure. Do not provide support from piping, ductwork, or other systems.

D. Unless specifically indicated or approved by Engineer, do not provide support from suspended ceiling support system or ceiling grid.

E. Unless specifically indicated or approved by Engineer, do not provide support from roof deck.

F. Do not penetrate or otherwise notch or cut structural members without approval of Structural Engineer.

G. Equipment Support and Attachment:
   1. Use metal fabricated supports or supports assembled from metal channel (strut) to support equipment as required.
   2. Use metal channel (strut) secured to studs to support equipment surface-mounted on hollow stud walls when wall strength is not sufficient to resist pull-out.
   3. Use metal channel (strut) to support surface-mounted equipment in wet or damp locations to provide space between equipment and mounting surface.
   4. Securely fasten floor-mounted equipment. Do not install equipment such that it relies on its own weight for support.

H. Secure fasteners according to manufacturer's recommended torque settings.

I. Remove temporary supports.

END OF SECTION

SECTION 26 05 33.13
CONDUIT FOR ELECTRICAL SYSTEMS

PART 1 GENERAL

1.01 SECTION INCLUDES

A. Galvanized steel rigid metal conduit (RMC).

B. Aluminum rigid metal conduit (RMC).

C. Intermediate metal conduit (IMC).

D. PVC-coated galvanized steel rigid metal conduit (RMC).

E. Flexible metal conduit (FMC).

F. Liquidtight flexible metal conduit (LFMC).

G. Electrical metallic tubing (EMT).

H. Rigid polyvinyl chloride (PVC) conduit.

I. Conduit fittings.

J. Accessories.

K. Conduit, fittings and conduit bodies.

1.02 RELATED REQUIREMENTS

A. Section 03 30 00 - Cast-in-Place Concrete: Concrete encasement of conduits.

B. Section 26 05 26 - Grounding and Bonding for Electrical Systems.

C. Section 26 05 29 - Hangers and Supports for Electrical Systems.

D. Section 26 05 53 - Identification for Electrical Systems.

E. Section 26 05 53 - Identification for Electrical Systems: Identification products and requirements.

1.03 REFERENCE STANDARDS

A. ANSI C80.1 - American National Standard for Electrical Rigid Steel Conduit (ERSC); 2005.

B. ANSI C80.3 - American National Standard for Steel Electrical Metallic Tubing (EMT); 2005.

C. ANSI C80.5 - American National Standard for Electrical Rigid Aluminum Conduit (ERAC); 2005.

D. ANSI C80.6 - American National Standard for Electrical Intermediate Metal Conduit (EIMC); 2005.

E. NECA 1 - Standard for Good Workmanship in Electrical Construction; 2010.

F. NECA 101 - Standard for Installing Steel Conduits (Rigid, IMC, EMT); 2013.

G. NECA 102 - Standard for Installing Aluminum Rigid Metal Conduit; 2004.

H. NECA 111 - Standard for Installing Nonmetallic Raceways (RNC, ENT, LFNC); 2003.

I. NEMA FB 1 - Fittings, Cast Metal Boxes, and Conduit Bodies for Conduit, Electrical Metallic Tubing, and Cable; 2012.

J. NEMA RN 1 - Polyvinyl-Chloride (PVC) Externally Coated Galvanized Rigid Steel Conduit and Intermediate Metal Conduit; 2005.

K. NEMA TC 2 - Electrical Polyvinyl Chloride (PVC) Conduit; 2013.

L. NEMA TC 3 - Polyvinyl Chloride (PVC) Fittings for Use with Rigid PVC Conduit and Tubing; 2015.

M. NFPA 70 - National Electrical Code: Most Recent Edition Adopted by Authority Having Jurisdiction, Including All Applicable Amendments and Supplements.

N. UL 1 - Flexible Metal Conduit; Current Edition, Including All Revisions.

O. UL 6 - Electrical Rigid Metal Conduit-Steel; Current Edition, Including All Revisions.

P. UL 6A - Electrical Rigid Metal Conduit-Aluminum, Red Brass, and Stainless Steel; Current Edition, Including All Revisions.

Q. UL 360 - Liquid-Tight Flexible Steel Conduit; Current Edition, Including All Revisions.

R. UL 514B - Conduit, Tubing, and Cable Fittings; Current Edition, Including All Revisions.

S. UL 651 - Schedule 40, 80, Type EB and A Rigid PVC Conduit and Fittings; Current Edition, Including All Revisions.

T. UL 797 - Electrical Metallic Tubing-Steel; Current Edition, Including All Revisions.

U. UL 1242 - Electrical Intermediate Metal Conduit-Steel; Current Edition, Including All Revisions.

1.04 SYSTEM DESCRIPTION

A. All building wiring shall be routed in approved metallic raceway (conduit) unless otherwise specifically noted.

B. All conduit shall be routed concealed (above lay-in ceiling, within walls, below grade or slab, etc.) within all finished spaces unless otherwise noted.

1.05 SUBMITTALS

A. Submit under provisions as described within the general requirements section.

B. Product Data: Provide for metallic conduit, flexible metal conduit, liquidtight flexible metal conduit, metallic tubing, nonmetallic conduit, flexible nonmetallic conduit, nonmetallic tubing, fittings, and conduit bodies.

1.06 QUALITY ASSURANCE

A. Conform to requirements of NFPA 70

B. Products: Listed and classified by Underwriters Laboratories Inc. as suitable for purpose specified and shown.

1.07 DELIVERY, STORAGE, AND HANDLING

A. Receive, inspect, handle, and store conduit and fittings in accordance with manufacturer's instructions.

B. Accept conduit on site. Inspect for damage.

C. Protect conduit from corrosion and entrance of debris by storing above grade. Provide appropriate covering.

PART 2 PRODUCTS

2.01 CONDUIT APPLICATIONS

A. Do not use conduit and associated fittings for applications other than as permitted by NFPA 70 and product listing.

B. Unless otherwise indicated and where not otherwise restricted, use the conduit types indicated for the specified applications. Where more than one listed application applies, comply with the most restrictive requirements. Where conduit type for a particular application is not specified, use galvanized steel rigid metal conduit.

C. Underground:
   1. Under Slab on Grade: Use galvanized steel rigid metal conduit.
   2. Exterior, Direct-Buried: Use galvanized steel rigid metal conduit.
   3. Exterior, Embedded Within Concrete: Use galvanized steel rigid metal conduit.
   4. Where rigid polyvinyl (PVC) conduit is provided, transition to galvanized steel rigid metal conduit where emerging from underground.

5. Where rigid polyvinyl (PVC) conduit larger than 2 inch (53 mm) trade size is provided, use galvanized steel rigid metal conduit elbows for bends.
6. Where steel conduit emerges from concrete into soil, use corrosion protection tape to provide supplementary corrosion protection for a minimum of 4 inches on either side of where conduit emerges or use PVC-coated galvanized steel rigid metal conduit.

D. Embedded Within Concrete:
1. Within Slab on Grade (within structural slabs only where approved by Structural Engineer): Use galvanized steel rigid metal conduit.
2. Within Slab Above Ground (within structural slabs only where approved by Structural Engineer): Use galvanized steel rigid metal conduit.
3. Within Concrete Walls Above Ground: Use galvanized steel rigid metal conduit.

E. Concealed Within Masonry Walls: Use electrical metallic tubing (EMT).

F. Concealed Within Hollow Stud Walls: Use electrical metallic tubing (EMT).

G. Concealed Above Accessible Ceilings: Use electrical metallic tubing (EMT).

H. Interior, Damp or Wet Locations: Use PVC-coated galvanized steel rigid metal conduit.

I. Exposed, Interior, Not Subject to Physical Damage: Use electrical metallic tubing (EMT).

J. Exposed, Interior, Subject to Physical Damage: Use intermediate metal conduit (IMC).

K. Exposed, Exterior: Use galvanized steel rigid metal conduit.

L. Corrosive Locations Above Ground: Use PVC-coated galvanized steel rigid metal conduit or aluminum rigid metal conduit.
1. Corrosive locations include, but are not limited to:
a. Cooling towers.
b. Pools and pool equipment rooms

M. Connections to Luminaires Above Accessible Ceilings: Use flexible metal conduit.
1. Maximum Length: 6 feet.

N. Connections to Vibrating Equipment:
1. Dry Locations: Use flexible metal conduit.
2. Damp, Wet, or Corrosive Locations: Use liquidtight flexible metal conduit.
3. Maximum Length: 6 feet unless otherwise indicated.
4. Vibrating equipment includes, but is not limited to:
a. Transformers.
b. Motors.
c. Generators

O. Fished in Existing Walls, Where Necessary: Use flexible metal conduit.

2.02 CONDUIT REQUIREMENTS

A. Existing Work: Where existing conduits are indicated to be reused, they may be reused only where they comply with specified requirements, are free from corrosion, and integrity is verified by pulling a mandrel through them.

B. Provide all conduit, fittings, supports, and accessories required for a complete raceway system.

C. Provide products listed, classified, and labeled as suitable for the purpose intended.

D. Minimum Conduit Size, Unless Otherwise Indicated:
1. Branch Circuits: 1/2 inch (16 mm) trade size.
2. Branch Circuit Homeruns: 3/4 inch (21 mm) trade size.
3. Flexible Connections to Luminaires: 3/8 inch (12 mm) trade size.

E. Where conduit size is not indicated, size to comply with NFPA 70 but not less than applicable minimum size requirements specified.

2.03 ALUMINUM RIGID METAL CONDUIT (RMC)

A. Description: NFPA 70, Type RMC aluminum rigid metal conduit complying with ANSI C80.5 and listed and labeled as complying with UL 6A.

B. Fittings:
   1. Non-Hazardous Locations: Use fittings complying with NEMA FB 1 and listed and labeled as complying with UL 514B.
   2. Material: Use aluminum.
   3. Connectors and Couplings: Use threaded type fittings only. Threadless set screw and compression (gland) type fittings are not permitted.

2.04 INTERMEDIATE METAL CONDUIT (IMC)

A. Description: NFPA 70, Type IMC galvanized steel intermediate metal conduit complying with ANSI C80.6 and listed and labeled as complying with UL 1242.

B. Fittings:
   1. Non-Hazardous Locations: Use fittings complying with NEMA FB 1 and listed and labeled as complying with UL 514B.
   2. Material: Use steel or malleable iron.
   3. Connectors and Couplings: Use threaded type fittings only. Threadless set screw and compression (gland) type fittings are not permitted.

2.05 PVC-COATED GALVANIZED STEEL RIGID METAL CONDUIT (RMC)

A. Manufacturers:
   1. Robroy Industries: www.robroy.com.

B. Description: NFPA 70, Type RMC galvanized steel rigid metal conduit with external polyvinyl chloride (PVC) coating complying with NEMA RN 1 and listed and labeled as complying with UL 6.

C. Exterior Coating: Polyvinyl chloride (PVC), nominal thickness of 40 mil.

D. PVC-Coated Fittings:
   1. Manufacturer: Same as manufacturer of PVC-coated conduit to be installed.
   2. Non-Hazardous Locations: Use fittings listed and labeled as complying with UL 514B.
   3. Material: Use steel or malleable iron.
   4. Exterior Coating: Polyvinyl chloride (PVC), minimum thickness of 40 mil.

E. PVC-Coated Supports: Furnish with exterior coating of polyvinyl chloride (PVC), minimum thickness of 15 mil.

2.06 FLEXIBLE METAL CONDUIT (FMC)

A. Manufacturers as described above.

B. Description: NFPA 70, Type FMC standard wall steel flexible metal conduit listed and labeled as complying with UL 1, and listed for use in classified firestop systems to be used.

C. Fittings:
   1. Description: Fittings complying with NEMA FB 1 and listed and labeled as complying with UL 514B.
   2. Material: Use steel or malleable iron.

D. Description: Interlocked steel construction.

E. Fittings: NEMA FB 1.

2.07 LIQUIDTIGHT FLEXIBLE METAL CONDUIT (LFMC)

A. Manufacturers as described above.

B. Description: NFPA 70, Type LFMC polyvinyl chloride (PVC) jacketed steel flexible metal conduit listed and labeled as complying with UL 360.

C. Fittings:
   1. Description: Fittings complying with NEMA FB 1 and listed and labeled as complying with UL 514B.
   2. Material: Use steel or malleable iron.

D. Description: Interlocked steel construction with PVC jacket.

E. Fittings: NEMA FB 1.

2.08 ELECTRICAL METALLIC TUBING (EMT)

A. Manufacturers as described above.

B. Description: NFPA 70, Type EMT steel electrical metallic tubing complying with ANSI C80.3 and listed and labeled as complying with UL 797.

C. Fittings:
   1. Description: Fittings complying with NEMA FB 1 and listed and labeled as complying with UL 514B.
   2. Material: Use steel or malleable iron.
   3. Connectors and Couplings: Use compression (gland) type.
      a. Do not use indenter type connectors and couplings.

D. Description: ANSI C80.3; galvanized tubing.

E. Fittings and Conduit Bodies: NEMA FB 1; steel compression type. Steel set screw type shall be used for conduit runs withing block walls.

2.09 RIGID POLYVINYL CHLORIDE (PVC) CONDUIT

A. Description: NFPA 70, Type PVC rigid polyvinyl chloride conduit complying with NEMA TC 2 and listed and labeled as complying with UL 651; Schedule 80 unless otherwise indicated; rated for use with conductors rated 90 degrees C.

B. Fittings:
   1. Manufacturer: Same as manufacturer of conduit to be connected.
   2. Description: Fittings complying with NEMA TC 3 and listed and labeled as complying with UL 651; material to match conduit.

2.10 ACCESSORIES

A. Corrosion Protection Tape: PVC-based, minimum thickness of 20 mil.

B. Conduit Joint Compound: Corrosion-resistant, electrically conductive; suitable for use with the conduit to be installed.

C. Solvent Cement for PVC Conduit and Fittings: As recommended by manufacturer of conduit and fittings to be installed.

D. Pull Strings: Use nylon cord with average breaking strength of not less than 200 pound-force.

E. Sealing Compound for Sealing Fittings: Listed for use with the particular fittings to be installed.

F. Modular Seals for Conduit Penetrations: Rated for minimum of 40 psig; Suitable for the conduits to be installed.

PART 3 EXECUTION

3.01 EXAMINATION

A. Verify that field measurements are as indicated.

B. Verify that mounting surfaces are ready to receive conduits.

C. Verify that conditions are satisfactory for installation prior to starting work.

D. Verify routing and termination locations of conduit prior to rough-in.

E. Conduit routing is shown on drawings in approximate locations unless dimensioned. Route as required to complete wiring system.

3.02 INSTALLATION

A. Install products in accordance with manufacturer's instructions.

B. Perform work in accordance with NECA 1 (general workmanship).

C. Install aluminum rigid metal conduit (RMC) in accordance with NECA 102.

D. Install intermediate metal conduit (IMC) in accordance with NECA 101.

E. Install PVC-coated galvanized steel rigid metal conduit (RMC) using only tools approved by the manufacturer.

F. Install rigid polyvinyl chloride (PVC) conduit in accordance with NECA 111.

G. Conduit Routing:
   1. When conduit destination is indicated without specific routing, determine exact routing required.
   2. Conceal all conduits unless specifically indicated to be exposed.
   3. Conduits in the following areas may be exposed, unless otherwise indicated:
      a. Electrical rooms.
      b. Mechanical equipment rooms.
      c. Within joists in areas with no ceiling.
   4. Unless otherwise approved, do not route conduits exposed:
      a. Across roofs.
      b. Across top of parapet walls.
      c. Across building exterior surfaces.
   5. Conduits installed underground or embedded in concrete may be routed in the shortest possible manner unless otherwise indicated. Route all other conduits parallel or perpendicular to building structure and surfaces, following surface contours where practical.
   6. Arrange conduit to maintain adequate headroom, clearances, and access.
   7. Arrange conduit to provide no more than the equivalent of three 90 degree bends between pull points.
   8. Route conduits above water and drain piping where possible.
   9. Arrange conduit to prevent moisture traps. Provide drain fittings at low points and at sealing fittings where moisture may collect.
   10. Maintain minimum clearance of 6 inches between conduits and piping for other systems.
   11. Maintain minimum clearance of 12 inches between conduits and hot surfaces. This includes, but is not limited to:
      a. Heaters.
      b. Hot water piping.
      c. Flues.
   12. Group parallel conduits in the same area together on a common rack.

H. Conduit Support:
   1. Secure and support conduits in accordance with NFPA 70 and Section 26 05 29 using suitable supports and methods approved by the authority having jurisdiction.
   2. Provide independent support from building structure. Do not provide support from piping, ductwork, or other systems.
   3. Installation Above Suspended Ceilings: Do not provide support from ceiling support system. Do not provide support from ceiling grid or allow conduits to lay on ceiling tiles.

I. Connections and Terminations:
   1. Use approved zinc-rich paint or conduit joint compound on field-cut threads of galvanized steel conduits prior to making connections.
   2. Where two threaded conduits must be joined and neither can be rotated, use three-piece couplings or split couplings. Do not use running threads.
   3. Use suitable adapters where required to transition from one type of conduit to another.

4. Provide drip loops for liquidtight flexible conduit connections to prevent drainage of liquid into connectors.
5. Terminate threaded conduits in boxes and enclosures using threaded hubs or double lock nuts for dry locations and raintight hubs for wet locations.
6. Where spare conduits stub up through concrete floors and are not terminated in a box or enclosure, provide threaded couplings equipped with threaded plugs set flush with finished floor.
7. Provide insulating bushings or insulated throats at all conduit terminations to protect conductors.
8. Secure joints and connections to provide maximum mechanical strength and electrical continuity.

J. Penetrations:
1. Do not penetrate or otherwise notch or cut structural members, including footings and grade beams, without approval of Structural Engineer.
2. Make penetrations perpendicular to surfaces unless otherwise indicated.
3. Provide sleeves for penetrations as indicated or as required to facilitate installation. Set sleeves flush with exposed surfaces unless otherwise indicated or required.
4. Conceal bends for conduit risers emerging above ground.
5. Seal interior of conduits entering the building from underground at first accessible point to prevent entry of moisture and gases.
6. Provide suitable modular seal where conduits penetrate exterior wall below grade.
7. Where conduits penetrate waterproof membrane, seal as required to maintain integrity of membrane.
8. Make penetrations for roof-mounted equipment within associated equipment openings and curbs where possible to minimize roofing system penetrations. Where penetrations are necessary, seal as indicated or as required to preserve integrity of roofing system and maintain roof warranty. Include proposed locations of penetrations and methods for sealing with submittals.
9. Provide metal escutcheon plates for conduit penetrations exposed to public view.
10. Install firestopping to preserve fire resistance rating of partitions and other elements, using materials and methods specified in Section 07 84 00.

K. Underground Installation:
1. Provide underground warning tape in accordance with Section 26 05 53 along entire conduit length for service entrance where not concrete-encased.

L. Embedment Within Structural Concrete Slabs (only where approved by Structural Engineer):
1. Install conduits within middle one third of slab thickness.
2. Secure conduits to prevent floating or movement during pouring of concrete.

M. Concrete Encasement: Where conduits not otherwise embedded within concrete are indicated to be concrete-encased, provide concrete in accordance with Section 03 30 00 with minimum concrete cover of 3 inches on all sides unless otherwise indicated.

N. Hazardous (Classified) Locations: Where conduits cross boundaries of hazardous (classified) locations, provide sealing fittings located as indicated or in accordance with NFPA 70.

O. Conduit Movement Provisions: Where conduits are subject to movement, provide expansion and expansion/deflection fittings to prevent damage to enclosed conductors or connected equipment. This includes, but is not limited to:
1. Where conduits cross structural joints intended for expansion, contraction, or deflection.
2. Where conduits are subject to earth movement by settlement or frost.

P. Condensation Prevention: Where conduits cross barriers between areas of potential substantial temperature differential, provide sealing fitting or approved sealing compound at an accessible point near the penetration to prevent condensation. This includes, but is not limited to:

1. Where conduits pass from outdoors into conditioned interior spaces.
2. Where conduits pass from unconditioned interior spaces into conditioned interior spaces.

Q. Provide pull string in all empty conduits and in conduits where conductors and cables are to be installed by others. Leave minimum slack of 12 inches at each end.

R. Provide grounding and bonding in accordance with Section 26 05 26.

S. Identify conduits in accordance with Section 26 05 53.

3.03 FIELD QUALITY CONTROL

A. Repair cuts and abrasions in galvanized finishes using zinc-rich paint recommended by manufacturer. Replace components that exhibit signs of corrosion.

B. Where coating of PVC-coated galvanized steel rigid metal conduit (RMC) contains cuts or abrasions, repair in accordance with manufacturer's instructions.

C. Correct deficiencies and replace damaged or defective conduits.

3.04 CLEANING

A. Clean interior of conduits to remove moisture and foreign matter.

3.05 PROTECTION

A. Immediately after installation of conduit, use suitable manufactured plugs to provide protection from entry of moisture and foreign material and do not remove until ready for installation of conductors.

B. Install conduit in accordance with NECA Standard of Installation.

C. Install steel conduit as specified in NECA 101.

D. Conduit fill shall not exceed 20% unless specifically noted on drawings.

E. Threads on steel conduit shall be given a coat of zinc dust in oil (T&B Kopr-Shield), or other approved compound. All joints shall be properly tightened and shall be watertight and insure a low resistance ground path in the conduit system.

F. Install nonmetallic conduit in accordance with manufacturer's instructions.

G. Arrange supports to prevent misalignment during wiring installation.

H. Support conduit using coated steel or malleable iron straps, lay-in adjustable hangers, clevis hangers, and split hangers.

I. Group related conduits; support using conduit rack. Construct rack using steel channel; provide space on each for 25 percent additional conduits.

J. Fasten conduit supports to building structure and surfaces under provisions of Section 26 05 29.

K. Do not support conduit with wire or perforated pipe straps. Remove wire used for temporary supports.

L. Do not attach conduit to ceiling support wires. In no case shall conduit runs rest on suspended or suspension members of the acoustical ceiling construction.

M. Arrange conduit to maintain headroom and present neat appearance.

N. Route exposed conduit parallel and perpendicular to walls.

O. Route conduit installed above accessible ceilings parallel and perpendicular to walls.

P. Route conduit in and under slab from point-to-point.

Q. Do not cross conduits in slab.

R. Maintain adequate clearance between conduit and piping.

S. Maintain 12 inch clearance between conduit and surfaces with temperatures exceeding 104 degrees F.

T. Cut conduit square using saw or pipecutter; de-burr cut ends.

U. Bring conduit to shoulder of fittings; fasten securely.

V. Join nonmetallic conduit using cement as recommended by manufacturer. Wipe nonmetallic conduit dry and clean before joining. Apply full even coat of cement to entire area inserted in fitting. Allow joint to cure for 20 minutes, minimum.

W. Use conduit hubs to fasten conduit to sheet metal boxes in damp and wet locations.

X. Install no more than equivalent of three 90 degree bends between boxes. Use conduit bodies to make sharp changes in direction, as around beams. Use hydraulic one shot bender to fabricate bends in metal conduit larger than 2 inch size. Should a greater number of bends be necessary, pull boxes shall be installed. Location of pull boxes must be approved by the Architect. Pull box covers shall be maded accessible. Where pull boxes occur above suspended plaster ceilings, provide access panels of type and size as required and as hereinsafter specified.

Y. Avoid moisture traps; provide junction box with drain fitting at low points in conduit system.

Z. Provide suitable fittings to accommodate expansion and deflection where conduit crosses seismic.

AA. Provide suitable pull string in each empty conduit except sleeves and nipples.

AB. Use suitable caps to protect installed conduit against entrance of dirt and moisture.

AC. Ground and bond conduit under provisions of Section 26 05 26.

AD. Identify conduit under provisions of Section 26 05 53.

AE. Where conduits terminate in panel boxes, distribution panels, switchboards, pull boxes or starter boxes, provide fiber bushing and lock nuts. Bushings shall be O-Z/Gedney Type "A" up to 2" conduit, and Type "B" over 2", or equal, Appleton or Thomas & Betts. Bushings made of thermoplastic or other flammable material are NOT acceptable.

AF. Where conduits terminate in pull and outlet boxes, provide approved tinned iron bushings and secure to boxes with lock nuts and screw type bushings.

AG. All conduit which enters the building through the floor or foundation walls shall enter through a hot dipped galvanized cast iron conduit entrance assembly. The shell of this fitting shall be installed in the foundation wall before the concrete is poured. Entrance seals shall be as manufactured by O-Z/Gedney Company, Type "FSK" for floors, "WSK" for walls or approved equal.

AH. All conduit entering the building below grade and terminating into panels or pull boxes will provide seals around all conductors at box entry with O-Z/Gedney Type CSBI sealing bushing.

AI. Install expansion-deflection fittings in all raceways at the expansion joints of the building in such a manner that the expansion joints of the building will be required in all directions. Install on all straight conduit runs in excess of 100 feet. Movement will be required in a straight line direction only. Use O-Z/Gedney type AX expansion fittings and DX expansion-deflection fittings. Maintain grounding continuity at each expansion fitting with a bonding jumper.

AJ. Final connections to all motors shall be made with flexible steel conduit. Final connections to roof exhaust fans shall be made with "Sealtite" waterproof flexible conduit. Provide additional ground wire to assure a perfect ground connection.

AK. No conduit will be routed on the roof. Where mechanical rooftop units are to be wired, conduit will be routed through, within the roof curb or routed with piping in mechanical roof curbs.

AL. All conduit ends, as installed, shall be plugged with cork, wood or brass plugs to prevent entrance of moisture, plaster, etc., and shall be blown and swabbed before wires are pulled in.

AM. Outlets or plates shall finish flush against exposed brick, tile, concrete or plaster walls and partitions. Unused outlets shall receive approved blank covers.

3.06 INTERFACE WITH OTHER PRODUCTS

A. Install conduit to preseerve fire resistance rating of partitions and other elements, using materials and methods specified within applicable sections of building specification.

B. Route conduit through roof openings for piping and ductwork wherever possible. Where separate roofing penetration is required, coordinate location and installation method with roofing installation..

END OF SECTION

SECTION 26 05 33.16
BOXES FOR ELECTRICAL SYSTEMS

PART 1 GENERAL

1.01 SECTION INCLUDES

A. Outlet and device boxes up to 100 cubic inches, including those used as junction and pull boxes.

B. Cabinets and enclosures, including junction and pull boxes larger than 100 cubic inches.

1.02 RELATED REQUIREMENTS

A. Section 26 05 29 - Hangers and Supports for Electrical Systems.

B. Section 26 05 33.13 - Conduit for Electrical Systems:
   1. Conduit bodies and other fittings.
   2. Additional requirements for locating boxes to limit conduit length and/or number of bends between pulling points.

C. Section 26 27 26 - Wiring Devices:
   1. Wall plates.
   2. Additional requirements for locating boxes for wiring devices.

1.03 REFERENCE STANDARDS

A. NECA 1 - Standard for Good Workmanship in Electrical Construction; 2010.

B. NECA 130 - Standard for Installing and Maintaining Wiring Devices; 2010.

C. NEMA FB 1 - Fittings, Cast Metal Boxes, and Conduit Bodies for Conduit, Electrical Metallic Tubing, and Cable; 2012.

D. NEMA OS 1 - Sheet-Steel Outlet Boxes, Device Boxes, Covers, and Box Supports; 2013.

E. NEMA OS 2 - Nonmetallic Outlet Boxes, Device Boxes, Covers and Box Supports; 2013.

F. NEMA 250 - Enclosures for Electrical Equipment (1000 Volts Maximum); 2014.

G. NFPA 70 - National Electrical Code: Most Recent Edition Adopted by Authority Having Jurisdiction, Including All Applicable Amendments and Supplements.

H. UL 50 - Enclosures for Electrical Equipment, Non-Environmental Considerations; Current Edition, Including All Revisions.

I. UL 50E - Enclosures for Electrical Equipment, Environmental Considerations; Current Edition, Including All Revisions.

J. UL 508A - Industrial Control Panels; Current Edition, Including All Revisions.

K. UL 514A - Metallic Outlet Boxes; Current Edition, Including All Revisions.

1.04 ADMINISTRATIVE REQUIREMENTS

A. Coordination:
   1. Coordinate the work with other trades to avoid placement of ductwork, piping, equipment, or other potential obstructions within the dedicated equipment spaces and working clearances for electrical equipment required by NFPA 70.
   2. Coordinate arrangement of electrical equipment with the dimensions and clearance requirements of the actual equipment to be installed.
   3. Coordinate minimum sizes of boxes with the actual installed arrangement of conductors, clamps, support fittings, and devices, calculated according to NFPA 70.
   4. Coordinate minimum sizes of pull boxes with the actual installed arrangement of connected conduits, calculated according to NFPA 70.
   5. Coordinate the placement of boxes with millwork, furniture, devices, equipment, etc. installed under other sections or by others.

6. Coordinate the work with other trades to preserve insulation integrity.
7. Coordinate the work with other trades to provide walls suitable for installation of flush-mounted boxes where indicated.
8. Notify Engineer of any conflicts with or deviations from the contract documents. Obtain direction before proceeding with work.

1.05 SUBMITTALS

A. Submit under provisions as described within the general requirements section.

B. Product Data: Provide manufacturer's standard catalog pages and data sheets for outlet and device boxes, cabinets and enclosures, and floor boxes.

C. Manufacturer's Installation Instructions: Indicate application conditions and limitations of use stipulated by product testing agency. Include instructions for storage, handling, protection, examination, preparation, and installation of product.

D. Project Record Documents: Record actual locations for outlet and device boxes, pull boxes, cabinets and enclosures, floor boxes, and underground handhole enclosures.

1.06 QUALITY ASSURANCE

A. Conform to requirements of NFPA 70

1.07 DELIVERY, STORAGE, AND HANDLING

A. Receive, inspect, handle, and store products in accordance with manufacturer's instructions.

PART 2 PRODUCTS

2.01 BOXES

A. General Requirements:
1. Do not use boxes and associated accessories for applications other than as permitted by NFPA 70 and product listing.
2. Provide all boxes, fittings, supports, and accessories required for a complete raceway system and to accommodate devices and equipment to be installed.
3. Provide products listed, classified, and labeled as suitable for the purpose intended.
4. Where box size is not indicated, size to comply with NFPA 70 but not less than applicable minimum size requirements specified.
5. Provide grounding terminals within boxes where equipment grounding conductors terminate.

B. Outlet and Device Boxes Up to 100 cubic inches, Including Those Used as Junction and Pull Boxes:
1. Use sheet-steel boxes for dry locations unless otherwise indicated or required.
2. Use cast iron boxes or cast aluminum boxes for damp or wet locations unless otherwise indicated or required; furnish with compatible weatherproof gasketed covers.
3. Use cast iron boxes or cast aluminum boxes where exposed galvanized steel rigid metal conduit or exposed intermediate metal conduit (IMC) is used.
4. Use cast aluminum boxes where aluminum rigid metal conduit is used.
5. Use suitable concrete type boxes where flush-mounted in concrete.
6. Use suitable masonry type boxes where flush-mounted in masonry walls.
7. Use raised covers suitable for the type of wall construction and device configuration where required.
8. Use shallow boxes where required by the type of wall construction.
9. Do not use "through-wall" boxes designed for access from both sides of wall.
10. Sheet-Steel Boxes: Comply with NEMA OS 1, and list and label as complying with UL 514A.
11. Cast Metal Boxes: Comply with NEMA FB 1, and list and label as complying with UL 514A; furnish with threaded hubs.

12. Boxes for Supporting Luminaires and Ceiling Fans: Listed as suitable for the type and weight of load to be supported; furnished with fixture stud to accommodate mounting of luminaire where required.
13. Boxes for Ganged Devices: Use multigang boxes of single-piece construction. Do not use field-connected gangable boxes.
14. Wall Plates: Comply with Section 26 27 26.

C. Cabinets and Enclosures, Including Junction and Pull Boxes Larger Than 100 cubic inches:
1. Comply with NEMA 250, and list and label as complying with UL 50 and UL 50E, or UL 508A.
2. NEMA 250 Environment Type, Unless Otherwise Indicated:
   a. Indoor Clean, Dry Locations: Type 1, painted steel.
   b. Outdoor Locations: Type 3R, painted steel.
3. Junction and Pull Boxes Larger Than 100 cubic inches:
   a. Provide screw-cover enclosures unless otherwise indicated.

2.02 GENERAL

A. In general, boxes shall be galvanized, pressed steel, have depth and shape best suited to the intended use, and contain knockouts of quantity and size equal to the conduit runs to be connected thereto. All boxes shall be securely fastened in place and shall provide sufficient support to the purpose intended.

B. Outlet boxes for mounting fixtures shall be equipped with slip-in or boltless fixture studs. Hickey studs will NOT be acceptable. Installation of the larger fixtures shall be made with hangers to support fixtures independently of outlet box.

C. Outlet boxes not mounting fixtures and at which no connections are made shall be equipped with steel cover plates. Although no connections are made in such outlets, sufficient wire shall be provided in each for making future connection.

D. Ceiling outlet boxes shall be galvanized, octagon, 4" x 1-1/2" deep without fixture stud, 2-1/8" deep with fixture stud.

E. Concrete boxes where used shall have a minimum of 1" concrete cover.

F. Exterior outlet boxes shall be weather-resistant (rain tight), having appropriate covers fitted with gaskets and fastened with screws. Boxes shall be Crouse-Hinds series CPS or Series V., as applicable.

G. Switch outlet boxes for local light control switches, convenience outlets, telephone, etc., shall be galvanized, square 4" x 1-1/2", with raised cover to fit flush with finish wall line. Multiple gang switch outlets shall consist of the required gang with raised covers. Where outlet boxes occur in exposed concrete block walls, boxes shall be installed in block cavity with a raised square edge tile cover of sufficient depth to extend out to face of block. Outlet boxes for special purposes shall be suitable for the purpose intended as herein specified and shown on the drawings.

H. See drawings for additional information. The above is the minimum specification unless otherwise noted on the drawings.

PART 3 EXECUTION

3.01 EXAMINATION

A. Verify that field measurements are as indicated.

B. Verify that mounting surfaces are ready to receive boxes.

C. Verify that conditions are satisfactory for installation prior to starting work.

3.02 INSTALLATION

A. Install products in accordance with manufacturer's instructions.

B. Install boxes in accordance with NECA 1 (general workmanship) and, where applicable, NECA 130, including mounting heights specified in those standards where mounting heights are not indicated.

C. Arrange equipment to provide minimum clearances in accordance with manufacturer's instructions and NFPA 70.

D. Provide separate boxes for emergency power and normal power systems.

E. Unless otherwise indicated, provide separate boxes for line voltage and low voltage systems.

F. Flush-mount boxes in finished areas unless specifically indicated to be surface-mounted.

G. Unless otherwise indicated, boxes may be surface-mounted where exposed conduits are indicated or permitted.

H. Box Locations:
   1. Locate boxes as required for devices installed under other sections or by others.
      a. Switches, Receptacles, and Other Wiring Devices: Comply with Section 26 27 26.
   2. Locate boxes so that wall plates do not span different building finishes.
   3. Locate boxes so that wall plates do not cross masonry joints.
   4. Unless otherwise indicated, where multiple outlet boxes are installed at the same location at different mounting heights, install along a common vertical center line.
   5. Do not install flush-mounted boxes on opposite sides of walls back-to-back. Provide minimum 6 inches horizontal separation unless otherwise indicated.
   6. Acoustic-Rated Walls: Do not install flush-mounted boxes on opposite sides of walls back-to-back; provide minimum 24 inches horizontal separation.
   7. Fire Resistance Rated Walls: Install flush-mounted boxes such that the required fire resistance will not be reduced.
      a. Do not install flush-mounted boxes on opposite sides of walls back-to-back; provide minimum 24 inches separation where wall is constructed with individual noncommunicating stud cavities or protect both boxes with listed putty pads.
      b. Do not install flush-mounted boxes with area larger than 16 square inches or such that the total aggregate area of openings exceeds 100 square inches for any 100 square feet of wall area.
   8. Locate junction and pull boxes as indicated, as required to facilitate installation of conductors, and to limit conduit length and/or number of bends between pulling points in accordance with Section 26 05 33.13.
   9. Locate junction and pull boxes in the following areas, unless otherwise indicated or approved by the Architect:
      a. Concealed above accessible suspended ceilings.
      b. Within joists in areas with no ceiling.
      c. Electrical rooms.
      d. Mechanical equipment rooms.

I. Box Supports:
   1. Secure and support boxes in accordance with NFPA 70 and Section 26 05 29 using suitable supports and methods approved by the authority having jurisdiction.
   2. Provide independent support from building structure except for cast metal boxes (other than boxes used for fixture support) supported by threaded conduit connections in accordance with NFPA 70. Do not provide support from piping, ductwork, or other systems.
   3. Installation Above Suspended Ceilings: Do not provide support from ceiling grid or ceiling support system.

J. Install boxes plumb and level.

K. Flush-Mounted Boxes:

1. Install boxes in noncombustible materials such as concrete, tile, gypsum, plaster, etc. so that front edge of box or associated raised cover is not set back from finished surface more than 1/4 inch or does not project beyond finished surface.
2. Install boxes in combustible materials such as wood so that front edge of box or associated raised cover is flush with finished surface.
3. Repair rough openings around boxes in noncombustible materials such as concrete, tile, gypsum, plaster, etc. so that there are no gaps or open spaces greater than 1/8 inch at the edge of the box.

L. Install boxes as required to preserve insulation integrity.

M. Metallic Floor Boxes: Install box level at the proper elevation to be flush with finished floor.

N. Install permanent barrier between ganged wiring devices when voltage between adjacent devices exceeds 300 V.

O. Install firestopping to preserve fire resistance rating of partitions and other elements, using materials and methods specified in Section 07 84 00.

P. Close unused box openings.

Q. Install blank wall plates on junction boxes and on outlet boxes with no devices or equipment installed or designated for future use.

R. Provide grounding and bonding in accordance with Section 26 05 26.

S. Electrical boxes are shown on Drawings in approximate locations.
   1. Adjust box locations up to 10 feet if required to accommodate intended purpose.

3.03 CLEANING

A. Clean interior of boxes to remove dirt, debris, plaster and other foreign material.

3.04 PROTECTION

A. Immediately after installation, protect boxes from entry of moisture and foreign material until ready for installation of conductors.

END OF SECTION

SECTION 26 05 53
IDENTIFICATION FOR ELECTRICAL SYSTEMS

PART 1 GENERAL

1.01 SECTION INCLUDES

A. Identification for Equipment
   1. Existing Panelboard Schedules
   2. Identification for Raceways - Color coded Raceway
   3. Identification for Boxes
      a. Field Painted Junction Boxes - Fire Alarm System
      b. Circuits
   4. Identification labels

1.02 RELATED REQUIREMENTS

A. Section 26 05 34 - Conduit: Color coding for conduit to identify systems other than normal power systems for accessible conduits.

B. Section 28 31 00 - Fire Alarm and Detection System

1.03 REFERENCE STANDARDS

A. NFPA 70 - National Electrical Code: Most Recent Edition Adopted by Authority Having Jurisdiction, Including All Applicable Amendments and Supplements.

B. NFPA 70E - Standard for Electrical Safety in the Workplace; 2015.

1.04 ADMINISTRATIVE REQUIREMENTS

A. Coordination:
   1. Verify final designations for equipment, systems, and components to be identified prior to fabrication of identification products.

B. Sequencing:
   1. Do not conceal items to be identified, in locations such as above suspended ceilings, until identification products have been installed.
   2. Do not install identification products until final surface finishes and painting are complete.

1.05 SUBMITTALS

A. Submit under provisions as described within the general requirements section.

B. Product Data: Provide catalog data for nameplates, labels, and markers.

C. Manufacturer's Instructions: Indicate application conditions and limitations of use stipulated by product testing agency. Include instructions for storage, handling, protection, examination, preparation and installation of product.

1.06 QUALITY ASSURANCE

A. Conform to requirements of NFPA 70

PART 2 PRODUCTS

2.01 IDENTIFICATION REQUIREMENTS

A. Identification for Equipment:
   1. Use identification nameplate or identification label to identify each piece of electrical distribution and control equipment and associated sections, compartments, and components.
      a. Panelboards:
         1) Use typewritten circuit directory to identify load(s) served for panelboards with a door. Identify spares and spaces using pencil.

2) For power panelboards without a door, use identification nameplate to identify load(s) served for each branch device. Do not identify spares and spaces.

2. Available Fault Current Documentation: Use identification label to identify the available fault current and date calculations were performed at locations requiring documentation by NFPA 70, including but not limited to the following.
   a. Service equipment.
   b. Industrial control panels.
   c. Motor control centers.
   d. Elevator control panels.
   e. Industrial machinery.

B. Identification for Raceways:
   1. Use True Color conduit to identify systems other than normal power systems for accessible conduits (above lay-in ceiling or otherwise visable)
      a. Color Code:
         1) Emergency Power System: Orange.
         2) Lighting: Yellow
         3) Power: Blue
         4) Fire Alarm System: Red.

C. Identification for Boxes:
   1. Fire alarm junction box covers shall be painted red. See fire alarm specification for additional instructions.
   2. Use identification labels to identify circuits enclosed.

PART 3 EXECUTION

3.01 PREPARATION

A. Clean surfaces to receive adhesive products according to manufacturer's instructions.

B. Degrease and clean surfaces to receive nameplates and labels.

3.02 INSTALLATION

A. Install products in accordance with manufacturer's instructions.

B. Install identification products to be plainly visible for examination, adjustment, servicing, and maintenance. Unless otherwise indicated, locate products as follows:
   1. Surface-Mounted Equipment: Enclosure front.
   2. Flush-Mounted Equipment: Inside of equipment door.
   3. Free-Standing Equipment: Enclosure front; also enclosure rear for equipment with rear access.
   4. Branch Devices: Adjacent to device.
   5. Interior Components: Legible from the point of access.
   6. Boxes: Inside surface of cover
   7. Conductors and Cables: Legible from the point of access.

C. Install identification products centered, level, and parallel with lines of item being identified.

D. Install self-adhesive labels and markers to achieve maximum adhesion, with no bubbles or wrinkles and edges properly sealed.

E. Mark all handwritten text, where permitted, to be neat and legible.

3.03 FIELD QUALITY CONTROL

A. Replace self-adhesive labels and markers that exhibit bubbles, wrinkles, curling or other signs of improper adhesion.

B. Panel identification
   1. Provide identification for each lighting and appliance panelboard with a computer generated directory accurately indicating rooms and/or equipment being serviced, sealed

in plastic and attached to door interior, etc. Note: Each index shall be sequenced in accord with actual panel circuiting (i.e. left side - 1, 3, 5, 7, etc., right side - 2, 4, 6, etc.).

2. Existing panelboards that require circuit modifications and/or additions shall have their circuit schedule completely replaced. All existing to remain circuits shall be traced to their load as required and indicated on the circuit schedule.

END OF SECTION

SECTION 26 05 83
WIRING CONNECTIONS

PART 1 GENERAL

1.01 SECTION INCLUDES

A. Electrical connections to equipment.

1.02 RELATED REQUIREMENTS

A. Section 26 05 19 - Low-Voltage Electrical Power Conductors and Cables.

B. Section 26 05 33.13 - Conduit for Electrical Systems.

C. Section 26 05 33.16 - Boxes for Electrical Systems.

D. Section 26 27 26 - Wiring Devices.

E. Section 26 28 16.16 - Enclosed Switches.

1.03 REFERENCE STANDARDS

A. NEMA WD 1 - General Color Requirements for Wiring Devices; 1999 (R 2010).

B. NEMA WD 6 - Wiring Devices - Dimensional Specifications; 2012.

C. NFPA 70 - National Electrical Code: Most Recent Edition Adopted by Authority Having Jurisdiction, Including All Applicable Amendments and Supplements.

1.04 ADMINISTRATIVE REQUIREMENTS

A. Coordination:
   1. Obtain and review shop drawings, product data, manufacturer's wiring diagrams, and manufacturer's instructions for equipment furnished under other sections.
   2. Determine connection locations and requirements.

B. Sequencing:
   1. Install rough-in of electrical connections before installation of equipment is required.
   2. Make electrical connections before required start-up of equipment.

1.05 SUBMITTALS

A. Submit under provisions as described within the general requirements section.

B. Product Data: Provide wiring device manufacturer’s catalog information showing dimensions, configurations, and construction.

C. Manufacturer's Instructions: Indicate application conditions and limitations of use stipulated by product testing agency. Include instructions for storage, handling, protection, examination, preparation, and installation of product.

1.06 QUALITY ASSURANCE

A. Conform to requirements of NFPA 70

B. Products: Listed, classified, and labeled as suitable for the purpose intended.

1.07 COORDINATION

A. Obtain and review shop drawings, product data, manufacturer's wiring diagrams, and manufacturer's instructions for equipment furnished under other sections.

B. Determine connection locations and requirements.

C. Sequence rough-in of electrical connections to coordinate with installation of equipment.

D. Sequence electrical connections to coordinate with start-up of equipment.

PART 2 PRODUCTS

2.01 MATERIALS

A. Disconnect Switches: As specified in Section 26 28 16.16 and in individual equipment sections.

B. Wiring Devices: As specified in Section 26 27 26.

C. Flexible Conduit: As specified in Section 26 05 33.13.

D. Wire and Cable: As specified in Section 26 05 19.

E. Boxes: As specified in Section 26 05 33.16.

PART 3 EXECUTION

3.01 EXAMINATION

A. Verify that equipment is ready for electrical connection, wiring, and energization.

3.02 ELECTRICAL CONNECTIONS

A. Make electrical connections in accordance with equipment manufacturer's instructions.

B. Final connections to all motors shall be made with flexible steel conduit. Final connections to roof exhaust fans shall be made with "Sealtite" waterproof flexible conduit. Provide additional ground wire to assure a perfect ground connection.

C. Make conduit connections to equipment using flexible conduit. Use liquidtight flexible conduit with watertight connectors in damp or wet locations.

D. Connect heat producing equipment using wire and cable with insulation suitable for temperatures encountered.

E. Provide receptacle outlet to accommodate connection with attachment plug.

F. Provide cord and cap where field-supplied attachment plug is required.

G. Install suitable strain-relief clamps and fittings for cord connections at outlet boxes and equipment connection boxes.

H. Install disconnect switches, controllers, control stations, and control devices to complete equipment wiring requirements.

I. Install terminal block jumpers to complete equipment wiring requirements.

J. Install interconnecting conduit and wiring between devices and equipment to complete equipment wiring requirements.

K. Coolers and Freezers: Cut and seal conduit openings in freezer and cooler walls, floor, and ceilings.

L. Seal roof penetrations as recommended by roofing manufacturer.

END OF SECTION

SECTION 28 31 00

EXTENSION/MODIFICATION OF THE EXISTING FIRE ALARM AND DETECTION SYSTEM (ADDRESSABLE)

PART 1 GENERAL

1.01 SECTION INCLUDES

A. Manual fire alarm stations.

B. Automatic smoke and heat detectors.

C. Fire alarm signaling appliances.

D. Auxiliary fire alarm equipment.

1.02 RELATED SECTIONS

A. Section 26 05 53 - Identification for Electrical Systems

B. Section 26 05 19 - Low-Voltage Electrical Power Conductors and Cables (600 V and Less).

C. Section 26 05 34 - Conduit.

D. Section 26 05 37 - Boxes.

1.03 REFERENCES

A. NFPA 70 - National Electrical Code; National Fire Protection Association; Most Recent Edition Adopted by Authority Having Jurisdiction, Including All Applicable Amendments and Supplements.

B. NFPA 72 - National Fire Alarm and Signaling Code: National Fire Protection Association; Most Recent Edition Adopted by Authority Having Jurisdiction, Including All Applicable Amendments and Supplements.

C. NFPA 101 - Code for Safety to Life from Fire in Buildings and Structures; National Fire Protection Association; 1997.

D. National Fire Protection Association (NFPA) - USA:
   1. No. 12 - High Pressure CO2 Extinguishing Systems
   2. No. 12B - Halon 1211 Extinguishing Systems
   3. No. 13 - Sprinkler Systems
   4. No. 13A - Halon 1301 Extinguishing Systems
   5. No. 15 - Water Spray Systems
   6. No. 16 - Foam/Water Deluge and Spray Systems
   7. No. 17 - Dry Chemical Extinguishing Systems
   8. No. 17A - Wet Chemical Extinguishing Systems
   9. No. 90A - NFPA
   10. No. 101 - Life Safety Code

E. Underwriters Laboratories Inc. (UL) - USA:
   1. No. 268 - Smoke Detectors for Fire Protective Signaling Systems
   2. No. 864 - Control Units for Fire Protective Signaling Systems
   3. No. 268A - Smoke Detectors for Duct Applications
   4. No. 521 - Heat Detectors for Fire Protective
   5. No. 464 - Audible Signaling Appliances
   6. No. 38 - Manually Actuated Signaling Boxes
   7. No. 346 - Waterflow Indicators for Fire Protective Signaling Systems
   8. No. 1076 - Control Units for Burglar Alarm Proprietary Protective Signaling Systems
   9. No. 1971 - Visual Notification Appliances

F. Local and State Building Codes

G. All requirements of the Authority Having Jurisdiction (AHJ).

1.04 SUMMARY

A. Furnish and install an extension to the existing fire alarm system, complete as shown on the plans. All new devices shall be fully compatible with existing analog/addressable fire alarm control panel. All new initiating devices shall be "analog/addressable" type devices unless otherwise described.

B. All new devices shall be UL cross listed with existing fire alarm control panel.

C. This Section includes fire alarm systems, including manual stations, detectors, notification appliances, signal equipment, controls, and devices.

D. Work covered by this specification section includes the furnishing of labor, equipment, materials, and complete operational performance required for installation of the Fire Alarm System extension as shown on the drawings, as specified, and as directed by the Architect/Engineer.

E. The work covered by this section of the specification is to be coordinated with the related work as specified elsewhere under the project specifications.

F. The Fire Alarm System extension shall consist of all necessary hardware equipment and software programming to perform the following functions:
   1. Fire Alarm and Detection Operations
   2. Remote Manual and Automatic Control of Elevators, all Smoke Control Related Fan System, Door Hold-open devices, Fire Suppression Appliances, Remote Monitoring of Sprinkler, Fire Pump and Emergency Power Systems, and/or Off Premise Notification.

G. Related Sections: The following Sections contain requirements that relate to this Section:
   1. Division 15 Section "Fire Protection" for water-flow, pressure, or tamper switches connected to fire alarm system.
   2. Division 15 Section "Pneumatic Control Systems" for duct smoke detectors.
   3. Division 15 Section "Electric Control Systems" for duct smoke detectors.
   4. Division 16 Section "Intrusion Detection Systems" for Security monitoring.

1.05 SYSTEM DESCRIPTION

A. General: Complete, addressable, microprocessor-based fire detection and alarm system with manual and automatic alarm initiation, addressable analog initiating devices, and automatic alert for certain analog smoke sensor zones as indicated.

B. Audible Alarm Notification: as required by AHJ for alarm zones indicated.

C. System connections for alarm-initiation and alarm-notification circuits shall be: as required by AHJ.

D. Functional Description: The following are required system functions and operating features:
   1. Priority of Signals: Accomplish automatic response functions by the first zone or device initiated. Alarm functions resulting from initiation by the first zone or device are not altered by subsequent alarms. The highest priority is an alarm signal. Priority two, Supervisory Service and Trouble signals have second-, third-, and fourth-level priority. Signals of a higher-level priority take precedence over signals of lower priority even though the lower-priority condition occurred first. Annunciate all alarm signals regardless of priority or order received.
   2. Non-interfering: Zone, power, wire, and supervise the system so a signal on one zone does not prevent the receipt of signals from any other zone. All zones are manually resettable from the FACU after the initiating device or devices are restored to normal.
   3. Signal Initiation: The manual or automatic operation of an alarm-initiating or supervisory-operating device shall cause the FACU to transmit an appropriate signal including:
      a. General alarm.
      b. Fire-suppression alarm.
      c. Manual station alarm.

d. Smoke detector alarm.
e. Heat detector alarm.
f. Fan shutdown.
g. Elevator recall.
h. Elevator shutdown.
i. System trouble.
j. Valve tamper supervisory.

4. Transmission to Remote Central Station: Automatically route alarm, supervisory, and trouble signals to a remote central station as required. All necessary equipment provided under this contract.
5. Loss of primary power at the FACP shall sound a trouble signal at the FACP and shall indicate at the FACP when the system is operating on an alternate power supply.
6. Annunciation: Manual and automatic operation of alarm and supervisory initiating devices shall be annunciated both on the FACU [and on the annunciator,] indicating the location and type of device.
7. FACU Alphanumeric Display: Shall display plain-language description of alarms, trouble signals, supervisory signals, monitoring actions, system and component status, and system commands.
8. General Alarm: A system general alarm shall include:
   a. Indicating the general alarm condition at the FACU and the annunciator.
   b. Identifying the device that is the source of the alarm at the FACU and the annunciator.
   c. Displaying the alarm on an 80 character LCD display. The system alarm LED shall flash on the control unit and the graphic annunciator until the alarm has been acknowledged. Once acknowledged, this same LED shall latch on. A subsequent alarm received from another zone shall flash the system alarm LED on the control unit and graphic annunciator. The display shall show the new alarm information.
   d. A pulsing alarm tone shall occur within the control unit and the graphic annunciator until the event has been acknowledged.
   e. Operating audible and visible alarm notification signals throughout the building.
   f. Sounding a continuous fire alarm signal until silenced by the alarm silence switch at the control unit or at the graphic annunciator.
   g. All visible alarm notification appliances shall flash continuously until the Alarm Silence Switch is operated.
   h. Any subsequent zone alarm shall reactivate the alarm notification appliances.
   i. Closing fire and smoke doors normally held open by magnetic door holders.
   j. Stopping supply and return fans serving zone where alarm is initiated.
   k. Activating any and all FACUs programmed for control of dedicated supply and exhaust fans in an alarm situation. Provide dedicated override control points located near the fan control centers. If the building HVAC controls are used for smoke exhaust, the designated fire alarm control unit shall be programmed to override the HVAC controls and put all fan and dampers into the appropriate fire mode.
   l. Activating a supervised signal to notify the local fire department.
   m. Initiating automatic elevator recall per ASME/ANSI A17. 1 and A17. 3.
9. The alarm activation of any elevator lobby smoke detector shall, in addition to the operations listed above, cause the elevator cabs to be recalled according to the following sequence:
   a. If the alarmed device is on any floor other than the main level of egress, the elevator cabs shall be recalled to the main level of egress.
   b. If the alarmed device is on the main egress level, the elevator cabs shall be recalled to the predetermined alternate recall level as determined by the local authority having jurisdiction.
10. Water-flow alarm switch operation:

a. Initiates a general alarm.

11. Smoke detection for a zone or device with alarm verification shall cause the following:
    a. Activation of a listed and approved "alarm verification" sequence at the FACU and the detector.
    b. The alarm verification operation shall be selectable by zone or addressable device.
    c. The control Unit shall have the capability to display the number of times (tally) a zone or device has gone into a verification mode. Should this smoke verification tally reach a pre-programmed number, a trouble condition shall occur.
12. Smoke Sensor Sensitivity Adjustment:
    a. Authorized operation of controls at the FACU shall cause the selection of specific addressable smoke sensors for adjustment, display of their current status and sensitivity settings, and control of changes in those settings.
13. Remote Controllability: Individually monitor sensors at the FACU for calibration, sensitivity, and alarm condition, and individually adjust for sensitivity from the FACU. The alarm decision for each sensor shall be determined by the control unit. The control unit shall determine the condition of each sensor by comparing the sensor value to the stored values.
14. Smoke Sensor Sensitivity: The sensitivity of each sensor will be as high as it can possibly be for its location without being so sensitive that it will be nuisance alarm-prone.
    a. The control unit shall maintain a moving average of the sensors smoke chamber value to automatically compensate (move the threshold) for dust, dirt, and component degradation conditions that could affect detection operations. The control unit shall automatically maintain a constant smoke obscuration sensitivity for each sensor (via the floating threshold) by compensating for environmental factors.
    b. The control unit shall automatically indicate when an individual sensor needs cleaning.
    c. When a sensors average value reaches a predetermined value, a "DIRTY SENSOR" trouble condition shall be audibly and visually indicated at the control unit for the individual sensor.
    d. Additionally, the LED on the sensor base shall glow steady giving a visible indication at the sensor location.
    e. If a "DIRTY SENSOR" is left unattended, and its average value increases to a second predetermined value, an "EXCESSIVELY DIRTY SENSOR" trouble condition shall be indicated at the control unit for the individual sensor.
    f. To prevent false alarms, these "DIRTY" conditions shall in no way decrease the amount of smoke obscuration necessary for system activation.
    g. The control unit shall continuously perform an automatic self-test routine on each sensor which will functionally check sensor electronics and ensure the accuracy of the values being transmitted to the control unit. Any sensor that fails this test shall indicate a "SELF TEST ABNORMAL" trouble condition.
    h. The FACU shall be listed for automatic compliance with NFPA 72 Sensitivity Testing requirement.
15. Sprinkler valve tamper switch operation shall cause or initiate the following:
    a. The activation of any standpipe or sprinkler valve supervisory (tamper) switch shall activate the system supervisory service audible signal and illuminate the LED at the control unit and the graphic annunciator.
    b. Differentiation between valve tamper activation and opens and/or grounds on the initiation circuit wiring shall be provided. The differentiation shall be clearly identified in plain-language on the FACU Alphanumeric display.
    c. Pressing the Supervisory Service Acknowledge Key shall silence the supervisory audible signal while maintaining the Supervisory Service LED "on" indicating the off-normal condition.
    d. A record of the event in the FACU historical log.

e. Transmission of supervisory signal to remote central station.
f. Restoring the valve to the normal position shall cause the Supervisory Service LED to extinguish, indicating restoration to normal.

16. Fire pump power failure, including a dead phase or phase-reversal condition shall cause or initiate the following:
    a. Activate the system supervisory service audible signal and illuminate the LED at the control unit and the graphic annunciator. Differentiation between fire pump power failure activation and opens and/or grounds on the initiation circuit wiring shall be clearly identified in plain-language on the FACU Alphanumeric display.
    b. Pressing the Supervisory Service Acknowledge Key will silence the supervisory audible signal while maintaining the Supervisory Service LED "on" indicating the off-normal condition.
    c. A record of the event in the FACU historical log.
    d. Transmission of supervisory signal to remote central station.
    e. Restoring the fire pump power shall cause the Supervisory Service LED to extinguish, indicating restoration to normal.
17. Low-air pressure switch operation on a dry pipe or preaction sprinkler system shall cause or initiate the following:
    a. Activate the system supervisory service audible signal and illuminate the LED at the control unit and the graphic annunciator. Differentiation between low-air pressure activation and opens and/or grounds on the initiation circuit wiring shall be clearly identified in plain-language on the FACU Alphanumeric display.
    b. Pressing the Supervisory Service Acknowledge Key shall silence the supervisory audible signal while maintaining the Supervisory Service LED "on" indicating the off-normal condition.
    c. A record of the event in the FACU historical LOG.
    d. Transmission of supervisory signal to remote central station.
    e. Restoring the air pressure to normal shall cause the Supervisory Service LED to extinguish, indicating restoration to normal.
18. Permissible Signal Time Elapse: The maximum permissible elapsed time between the actuation of any fire alarm or fire-detection system alarm-initiating device and its indication at the FACU shall be five seconds.
19. Circuit Supervision: Circuit faults shall be indicated by means of both a zone and a trouble signal at the FACU. Provide a distinctive indicating audible tone and alphanumeric annunciation.
20. Independent System Monitoring: Supervise each independent smoke detection system, fire suppression system, duct detector, and elevator smoke detection system for both normal operation and trouble.
21. The system shall provide "on/off/auto" switches. In the automatic mode, the mechanical controls shall operate the air handling systems as required normally. The system shall provide "on" or "off" status indication of the air handling system via separate and distinct "on" and "off" LED indicators. Manual control shall be provided to override the automatic function.
22. There shall be independent supervision for opens of the air handling on/off/auto switch control output wiring. A discrete trouble per output circuit will be provided for indication. A ground condition of the air handling control output wiring shall indicate a common ground trouble on the control unit.
23. The system shall support 100% of addressable devices in alarm or operated at the same time, under both primary(AC) and secondary (battery) power conditions. Systems which cannot support 100% of their points in alarm simultaneously cannot assure appropriate system response and are not acceptable.

E. Alarm Silencing

1. If the "Alarm Silence" button is pressed, all audible and visible alarm signals shall cease operation.
2. Signals shall not be silenced during the [60] second alarm silence inhibit mode.

F. System Reset
1. The "System Reset" button shall be used to return the system to its normal state after an alarm condition has been remedied. Display messages shall provide operator assurance of the sequential steps ("IN PROGRESS", "RESET COMPLETED") as they occur, should all alarm conditions be cleared.
2. Should an alarm condition continue, the system will remain in an alarmed state. System control relays shall not reset. The control unit alarm LED shall remain on. The alarmed points will not require acknowledgment if they were previously acknowledged.
3. Upon reset of the fire alarm control unit, air handling units shall sequentially start up to minimize power demand.

G. The ability to activate a manual evacuation shall be provided for the purpose of performing evacuation drills.

H. The ability to perform a manual bypass of selected automatic functions shall be provided.

I. The actuation of the "enable one person test" program at the control unit shall activate the "One Person Testing" mode of the system which shall cause the following to occur:
1. The city circuit connection shall be bypassed.
2. Control relay functions shall be bypassed.
3. The control unit shall show a trouble condition.
4. The alarm activation of any initiation device shall cause the audible notification appliances to code a number of pulses to match the zone or device number.
5. The unit shall automatically reset itself after signaling is complete.
6. Any momentary opening of an initiating or notification appliance circuit wiring shall cause the audible signals to sound for 4 seconds indicating the trouble condition.

J. Auxiliary manual controls shall be supervised so that an "off normal" position of any switch shall cause an "off normal" system trouble. The "off normal" status shall be clearly identified in plain-language on the FACU alphanumeric display.

K. Each independently supervised circuit shall include a discrete readout to indicate disarrangement conditions per circuit.

L. The System Modules shall be electrically supervised for module placement. Should a module become disconnected the system trouble indicator shall illuminate and the audible trouble signal shall sound.

M. The system shall have provisions for disabling and enabling all circuits individually for maintenance or testing purposes.

N. Power Requirements
1. The control unit shall receive 120 VAC power via a dedicated fused disconnect circuit.
2. The system shall be provided with sufficient battery capacity to operate the entire system upon loss of normal 120 VAC power in a normal supervisory mode for a period of 60 hours with 15 minutes of alarm operation at the end of this period. The system shall automatically transfer to battery standby upon power failure. All battery charging and recharging operations shall be automatic.
3. All circuits requiring system operating power shall be 24 VDC and shall be individually fused or equivalently protected at the control unit.
4. The incoming power to the system shall be supervised so that any power failure must be audibly and visibly indicated at the control unit and the graphic annunciator. A green "power on" LED shall be displayed continuously while incoming power is present.

5. The system batteries shall be supervised so that a low battery condition or disconnection of the battery shall be audibly and visibly indicated at the control unit and the graphic annunciator.
6. If a "LOW BATTERY" condition is left unattended a second stage "DEPLETED BATTERY" trouble condition shall be audibly and visibly reported at the control unit indicating the batteries are below the listed system operating voltage. Systems that completely shut down and fail to indicate a "DEPLETED BATTERY" condition shall be unacceptable.

O. Minimum equipment submissions must include:
1. Complete description data indicating UL listing for all network components.
2. Complete sequence of operation of all functions of the NETwork.
3. A list of every network node address.
4. A list of every address of every device connected to a network node that is provided for purposes of alarm initiating, status monitoring, supervised notification appliance circuits, and auxiliary control.
5. Complete diagrams for all components and interfaces to equipment supplied by others.
6. A listing of the manufacturer's representatives responsible for installation coordination and service.
7. Location of all controls, alarm actuating devices and notification appliance devices as shown on drawings.

1.06 SUBMITTALS

A. Submit shop drawings for all equipment.

B. Submit in accordance with specification as hereinbefore stated.

C. General: Submit the following according to Conditions of Contract and Division 1 Specification Sections.
1. Product data for system components. Include dimensioned plans and elevations showing minimum clearances and installed features and devices. Include list of materials and NRTL-listing data.
2. Manufacturer's Installation Instructions: Indicate application conditions and limitations of use stipulated by product testing agency. Include instructions for storage, handling, protection, examination, preparation, installation, and starting of products.
3. Wiring diagrams from manufacturer differentiating between factory- and field-installed wiring. Include diagrams for equipment and for system with all terminals and interconnections identified. Indicate components for both field and factory wiring.
4. Shop drawings showing details of graphic annunciator.
5. System operation description covering this specific Project including method of operation and supervision of each type of circuit and sequence of operations for all manually and automatically initiated system inputs and outputs. Manufacturer's standard descriptions for generic systems are not acceptable.
6. Operating instructions for mounting at the FACU.
7. Operation and maintenance data for inclusion in Operating and Maintenance Manual specified in Division 1. Include data for each type product, including all features and operating sequences, both automatic and manual. Include recommendations for spare parts to be stocked at the site. Provide the names, addresses, and telephone numbers of service organizations that carry stock of repair parts for the system to be furnished.
8. Product certification signed by the manufacturer of the fire alarm system components certifying that their products comply with indicated requirements.
9. Submission to Authority Having Jurisdiction: In addition to routine submission of the above material, make an identical submission to the authority having jurisdiction. Include copies of annotated Contract Drawings as required to depict component locations to facilitate review. Upon receipt of comments from the Authority, submit them for review. Make re-submissions if required to make clarifications or revisions to obtain approval.

10. Record of field tests of system.
11. Bill of materials listing all components and devices.
12. A list of every system address provided for purposes of alarm initiation, status monitoring, supervised signaling, and auxiliary controls.
13. System wiring and interconnection diagrams.
14. Operating instructions and maintenance manuals detailing component and general system operating description.
15. Standby battery power calculations.

1.07 QUALITY ASSURANCE

A. Conform to requirements of NFPA 70.

B. Conform to requirements of NFPA 72.

C. Single-Source Responsibility: Obtain fire alarm components from a single source ISO 9002 certified manufacturer who assumes responsibility for compatibility for system components.

D. The system shall have proper listing and/or approval from the following nationally recognized agencies:
   1. UL - Underwriters Laboratories, Inc.
   2. FM - Factory Mutual

E. Compliance With Local Requirements: Comply with the applicable building code, local ordinances, and regulations, and the requirements of the authority having jurisdiction.

F. Manufacturer Qualifications: Company specializing in manufacturing the products specified in this section with minimum Ten years documented experience with service facilities within 50 miles of Project.

G. Installer Qualifications: Company specializing in installing the products specified in this section.
   1. Supervisor
      a. The installing Contractor shall provide the following: NICET Fire Alarm Technicians to perform the installation of the system. A NICET Level 4 Fire Alarm Technician shall supervise the installation of the fire alarm system/mass notification system. A Fire Alarm Technician with a minimum of 8 years of experience shall perform/supervise the installation of the fire alarm system/mass notification system. The Fire Alarm technicians supervising the installation of equipment shall be factory trained in the installation, adjustment, testing, and operation of the equipment specified herein and on the drawings.
   2. Technician
      a. The installing Contractor shall provide the following: Fire Alarm Technicians with a minimum of four years of experience shall be utilized to assist in the installation and terminate fire alarm/mass notification devices, cabinets and panels. The Fire Alarm technicians installing the equipment shall be factory trained in the installation, adjustment, testing, and operation of the equipment specified herein and on the drawings.
   3. Test Personnel
      a. The installing Contractor shall provide the following: Fire Alarm Technicians with a minimum of eight years of experience shall be utilized to test and certify the installation of the fire alarm/mass notification devices, cabinets and panels. The Fire Alarm technicians testing the equipment shall be factory trained in the installation, adjustment, testing, and operation of the equipment specified herein and on the drawings.
   4. Manufacturer's Representative
      a. The fire alarm and mass notification equipment manufacturer's representative shall be present for the connection of wiring to the control panel. The Manufacturer's Representative shall be an employee of the manufacturer with necessary technical training on the system being installed.

5. Factory-authorized

H. Products: Furnish products listed and classified by Underwriters Laboratories Inc. as suitable for purpose specified and indicated.

I. All new devices shall be certified U.L. listed and cross listed for use with the main fire alarm control panel and shall bear the same manufacturer's name on the main control panel as well as all the remote devices. Systems having equipment with various manufacturers' names will not be acceptable.

J. All control equipment must have transient protection to comply with UL864 requirements.

K. Where Fire Alarm circuits leave the building, additional transient protection must be provided for each circuit. Devices must be UL listed under standard #497B (Isolated Loop Circuit Protectors).

1.08 MANUFACTURER'S FIELD SERVICES

A. The following supervision of installation shall be provided by trained service technician who is employed by the manufacturer of the fire alarm equipment. The technician shall be NICET certified and have had a minimum of four (4) years of service experience in the fire alarm industry. The technician's name shall appear on equipment submittals and the letter of certification from the fire alarm system manufacturer. The manufacturer's service technician shall be responsible for the following items:

1. Pre-installation visit to the job site to review equipment submittals and verify method by which the system should be wired.
2. During job progress, make weekly job site visits to verify installation and wiring system.
3. Upon completion of wiring, final connections shall be made under the supervision of this technician, and final checkout and certification of the system.
4. At the time of final checkout, technician shall give operational instructions to the Owner and/or his representative on the system.
5. Three (3) months after final checkout, technician shall return to job site and re-configure system according to Owner's requirements.
6. All job site visits shall be dated and documented in writing and signed by the manufacturer's representative. Any discrepancy will be noted on this document and a copy kept in the system job folder which will be turned over to the project Engineer.

1.09 SOFTWARE MODIFICATIONS

A. Provide the services of a factory trained and authorized Fox Valley Fire & Safety technician to perform all system software modifications, upgrades or changes.

B. Provide all hardware, software, programming tools and documentation necessary to modify the fire alarm system on the site. Modification includes addition and deletion of devices, circuits, zones and changes to system operation and custom label changes for devices or zones. The system structure and software shall place no limit on the type or extent of software modifications on-site. Modification of software shall not require power-down of the system or loss of system fire protection while modifications are being made.

C. Upon submittal of “as-built drawings”, contractor shall have 60-days to complete the graphic screens. Graphic screens shall match the as-built drawings.

PART 2 PRODUCTS - NOTIFIER APPROVED DEVICES AND COMPONENTS

2.01 INITIATING DEVICES

A. MANUAL PULL STATIONS

1. Description: Double-action type, fabricated of high impact red polycarbonate or metal, and finished in red with molded, raised-letter operating instructions of contrasting color. The manual station shall be fitted with screw terminals for field wire attachment. Station will mechanically latch upon operation and remain so until manually reset by opening with a

key common with the FACU. Stations requiring the breaking of a glass panel are not acceptable. All manual stations shall be fully addressable.

2. Station Reset: The front of the station is to be hinged to a backplate assembly and must be opened with a key to reset the station. The key shall be common with the FACU. Stations which use Allen wrenches or special tools to reset will not be accepted.
3. Addressable pull stations will contain a communication transmitter and receiver having a unique identification and capability for status reporting to the FACU. There shall be no limit to the number of stations, sensors, or zone adapter modules, which may be activated or "in alarm" simultaneously.
4. The addressable manual station shall be Underwriters' Laboratories, Inc. listed.

B. SMOKE SENSORS and BASES

1. General: Comply with UL 268, "Smoke Detectors for Fire Protective Signaling Systems. " Include the following features:
   a. Factory Nameplate: Serial number and type identification.
   b. Operating Voltage: 24 VDC, nominal.
   c. Self-Restoring: Sensors do not require resetting or readjustment after actuation to restore them to normal operation.
   d. Modular Arrangement: Sensor and associated encapsulated electronic components are mounted in a module that connects to a fixed base with a twist-locking plug connection. The plug connection requires no springs for secure mounting and contact maintenance. Terminals in the fixed base accept building wiring. Sensor construction shall have a mounting base with a twist-lock detecting head that is lockable. The locking feature must be field removable when not required. Removal of the sensor head shall cause a trouble signal at the FACU. Sensor design shall provide compatibility with other fire alarm detection loop devices (heat sensors, pull stations, etc.
   e. Each sensor shall contain an LED that will flash each time it is scanned by the FACU. When the FACU determines that a sensor is in an alarm or a trouble condition, the FACU shall command the LED on that sensor's base to activate steadily indicating the abnormal condition. Sensors without this visible indication shall not be acceptable. Sensor LEDs that are on due to a trouble condition shall be deactivated when an alarm is active in the system.
   f. Each sensor shall contain a magnetically actuated test switch to provide for easy alarm testing at the sensor location.
   g. Each sensor shall be scanned by the FACU for its type identification to prevent inadvertent substitution of another sensor type. The FACU shall provide default alarm operation with the installed device but shall initiate a "Wrong Device" trouble condition until the proper type is installed or the programmed sensor type is changed. Smoke sensors shall be capable of being replaced with Heat sensors to provide protection during construction and renovation without reprogramming.
   h. The sensor's electronics shall be immune from false alarms caused by EMI and RFI.
   i. Visual Indicator: Connected to indicate sensor has operated.
   j. Addressability: Sensors include a communication transmitter and receiver in the mounting base having a unique identification and capability for status reporting to the FACU.
2. Modular carbon monoxide Sensors: Include the following features and characteristics:
   a. UL 2075 Listed for Gas and Vapor Detectors and Sensors
   b. The detector shall be equipped with a sounder and a trouble relay.
   c. The detector’s base shall be able to mount to a single-gang electrical box or direct (surface) mount to the wall
   d. Wiring connections shall be made by means of SEMS screws.
   e. The detector shall provide dual color LED indication, which blinks to indictate normal standy, alarm or end of life.

f. When the sensor supervision is in a trouble condition, the detector shall send a trouble signal to the panel.
g. When the detector gives a trouble or end-of-life signal, the detector shall be replaced.

3. CO (Carbon Monoxide) Detector - Harsh Environment
   a. Provide in all kitchen and Boiler Room locations
   b. Power: 3 W (max) from 12 to 24 VAC or 12 to 32 VDC
   c. Current @ 24 VDC: 75 mA in alarm, 50 mA fan relay on and 23 mA stand by
   d. Shipping Weight: 1 pound (0.45 kg)
   e. Size: 4 1/2 x 4 x 2 1/8 in. (11.4 X 10.2 X 5.4 cm)
   f. Color: Dark gray
   g. Connections: plugs/terminals
   h. Mounting Box: (not included) 4x4 electrical
   i. Fan Relay: 5 A, 240 VAC, pilot duty, SPDT, latching or non-latching
   j. Fan Relay Actuation: selectable at “dIS” (disabled), 15 ppm, 25 ppm, 35 ppm (default), 50 ppm or 100 ppm
   k. Fan Delay Settings: 0, 1, 3 (default), 5 and 10 minutes
   l. Fan Relay Minimum Runtime Settings: 0 (default), 3, 5, 10 or 15 minutes
   m. Alarm Relay: 0.5A 120 V, 60 VA
   n. Alarm Relay Actuation: selectable N.O. default or N.C.
   o. Alarm Relay Settings: dIS, 50 ppm, 100 ppm, 150 ppm and 200 ppm (default)
   p. Current Loop: 4-20 mA for 0-200 ppm
   q. Operating Environment: 0°F to 125° F (-18°C to 52°C),10 to 90% RH non-condensing
   r. Macurco: CM-6
4. Modular Photoelectric Smoke Sensors: Include the following features and characteristics:
   a. An infrared sensor light with matching photosensitive receiver actuated by the presence of visible products of combustion.
   b. The photo sensor sensitivity range shall be programmable from 0.2% to 3.7% smoke obscuration for applications from clean rooms to mechanical equipment rooms.
   c. Modular Ionization Type Smoke Sensors: Include the following features and characteristics:
   d. Multiple chamber type operating on the ionization principle and actuated by the presence of invisible products of combustion.
   e. The ionization sensor sensitivity range shall be programmable from 0.5% to 1.7% smoke obscuration.
5. Modular Bases: Each modular base shall accept either a photoelectric, ionization, or heat sensor. Means shall be provided for address setting and for connection of communications wiring.
   a. Standard modular base: A standard base shall be available without provisions for additional functions.
   b. Remote LED Base: Shall include provisions for connection of a remote LED alarm indicator.
   c. Relay Base: Shall include provisions for connection of a remote relay and remote LED alarm indicator with the following characteristics:
   d. The remote relay shall be capable of being activated by the FACU independent of the status of the base's sensor, and requiring only one control panel address.
   e. The relay base shall supervise connections to the remote relay allowing it to be mounted remotely from the sensor base location.
   f. In addition to the remote relay, the relay base shall have provisions for the connection of a remote LED alarm indicator.
6. Duct Smoke Sensor: Photoelectric type, with sampling tube of design and dimensions as recommended by the manufacturer for the specific duct size and installation conditions where applied.

a. The analog addressable duct smoke sensors shall operate on the light scattering, photodiode principle, and shall automatically communicate actual smoke chamber values to the system FACU. The sensors shall not have a self contained smoke sensitivity setting. The sensor's electronics shall be shielded to protect against nuisance alarms from EMI and RFI.
b. The Duct Housing shall provide an auxiliary alarm relay with a single "Form C" contact rated at 1 A @ 28 VDC resistive. This auxiliary relay operates when the sensor reaches its alarm threshold, or when the FACU via software control, manually or automatically operates the relay in response to inputs from other devices.
c. For maintenance purposes, it shall be possible to clean the duct housing sampling tubes by accessing them through the duct housing front cover.
d. Each duct sensor shall have a Remote Test Station with an alarm LED and test switch.
e. The duct sensor sensitivity range shall be programmable from 0.5% to 3.7% smoke obscuration.

C. MODULAR THERMAL SENSOR
1. Rate-compensated/fixed-temperature type with plug-in base and alarm indication LED. Sensors have a communication transmitter and receiver with unique identification and capability for status reporting to the FACU. Thermal Sensors shall have a programmable sensitivity of 135° F or 155° F Fixed Temperature, and 15° F or 20° F Rate of Rise. The Rate of Rise operation shall be capable of being disabled.

2.02 INDICATING DEVICES

A. General: Equip alarm notification appliances for mounting as indicated. Provide terminal blocks for system connections. Device shall be U.L. 1971 listed.

B. Fire Alarm Horns: Electric vibrating polarized type, operating on 24 VDC, with provision for housing the operating mechanism behind a grille. Horns produce a sound pressure level of 87dB, measured 10 feet from the source.

C. Visual Notification Appliances: Flash rate shall be 1 flash per second with a 15/75 candela flash intensity or as marked on drawing, xenon flash output, 24 VDC operation, wall mounted, compatible with ADA requirements with the word "FIRE" clearly visible.

D. Combination notification appliances consist of factory combined, audible and visual notification units in a single mounting assembly.

E. Visual devices within entire facility shall have synchronizing flash rates.
1. It shall be permissible to synchronize visual devices based upon logical building segments. Each segment shall be visually independent from one another. Submittal documents shall contain graphical description of synchronization scheme.

2.03 ADDRESSABLE CIRCUIT INTERFACE MODULES

A. Addressable Circuit Interface Modules: Arrange to monitor one or more system components that are not otherwise equipped for multiplexing communication. Modules transmit identification and status to the FACU using a communication transmitter and receiver with unique identification and capability for status reporting to the FACU. Modules shall be used for monitoring of waterflow, valve tamper, non-addressable detectors, and for control of notification appliances and AHU systems.

B. Addressable Circuit Interface Modules shall be capable of mounting in a standard electric outlet box. Modules will receive their operating power from the signaling line or a separate two wire pair running from an appropriate power supply as required.

C. There shall be three types of modules:
1. Type 1: Monitor Circuit Interface Module:
a. For conventional 2-wire smoke detector and/or contact device monitoring with Class B or Class A wiring supervision: This type of module will provide power to and

monitor the status of a zone consisting of conventional 2-wire smoke detectors and/or N/O contact devices as specified elsewhere and identified in a schedule on the plans. This module shall communicate four zone status conditions (normal, short, current limited, and open) to the FACU.

b. For conventional 4-wire smoke detector with Class B wiring supervision: This type of module will provide power to and monitor the contact status of a zone consisting of conventional 4-wire smoke detectors as specified elsewhere and identified in a schedule on the plans. The module will provide detector reset capability and over-current power protection for the 4-wire detector. This module shall communicate four zone status conditions (normal, short, current limited, and open) to the FACU.

2. Type 2: Line Powered Monitor Circuit Interface Module: This type of module is an individually addressable module that has both its power and its communications supplied by the two wire multiplexing signaling line circuit. It provides location specific addressability to an initiating device by monitoring normally open dry contacts. This module shall communicate four zone status conditions (normal, short, current limited, and open) to the FACU.

3. Type 3: Line Powered Control Module: This type of module will provide non-supervised form C relay switching with a single "Form C" contact rated at 2 A @ 24 VDC, power limited and at ½ A @ 120 VAC, non-power limited. Both power and communications to this module shall be supplied by the two wire multiplexing signaling line circuit. The system shall be capable of energizing 100% of the relays connected to the signaling line circuit.

D. The Circuit Interface Module shall be supervised and uniquely identified by the FACU. Module identification shall be transmitted to the FACU for processing according to the program instructions. Should the module become non-operational, tampered with, or removed, a discrete trouble signal, unique to the module, shall be transmitted to, and annunciated at, the FACU.

E. The Circuit Interface Module shall be capable of being programmed for its "address" location on the multiplexing signaling line circuit. The Circuit Interface Module shall be compatible with addressable manual stations and addressable sensors on the same multiplexing signaling line circuit.

2.04 MAGNETIC DOOR HOLDERS

A. Description: Units are equipped for wall or door mounting as indicated and are complete with matching door plate. Electromagnet operates from a 24 VDC source, and develops a 25 lbs. holding force.

B. Material and Finish: Match door hardware.

2.05 REMOTE LCD ANNUNCIATOR

A. Provide Remote LCD Annunciator (number as shown on drawings) with the same "look and feel" as the control panel operator interface. The remote LCD Annunciator shall use the same Primary Acknowledge, Silence, and Reset Keys, Status LEDs and LCD Display as the FACU.

B. Under normal conditions the LCD shall display a "System is Normal" message and the current time and date.

C. Should an abnormal condition be detected the appropriate LED (Alarm, Supervisory or Trouble) shall flash. The Unit audible signal shall pulse for alarm conditions and sound steady for trouble and supervisory conditions.

D. The LCD shall display the following information relative to the abnormal condition of a point in the system:

1. 40 character custom location label
2. Type of device (e.g., smoke, pull station, waterflow)
3. Point status (e.g., alarm, trouble)

E. Operator keys shall be key switch enabled to prevent unauthorized use. The key shall only be removable in the disabled position. Acknowledge, Silence and Reset operation shall be the same as on the FACU.

2.06 EMERGENCY POWER SUPPLY

A. General: Components include battery, charger, and an automatic transfer switch.

B. Battery: Sealed lead-acid type. Provide sufficient capacity to operate the complete alarm system in normal or supervisory (non-alarm) mode for a period of 60 hours. Following this period of operation on battery power, the battery shall have sufficient capacity to operate all components of the system, including all notification appliances in alarm or supervisory mode for a period of 15 minutes.

C. Magnetic door holders are not served by emergency battery power. Magnetic door holders are released after 15 seconds when normal power fails.

2.07 FIRE ALARM CONDUIT, WIRE, AND BOXES

A. Conduit:
   1. Conduit shall be in accordance with The National Electrical Code (NEC), local and state requirements and as described elsewhere in this specification.
   2. Conduit fill shall not exceed 40 percent of interior cross sectional area where three or more cables are contained within a single conduit.
   3. Cable must be separated from any open conductors of power, or Class 1 circuits, and shall not be placed in any conduit, junction box or raceway containing these conductors, per NEC Article 760-29.
   4. Wiring for 24 volt DC control, alarm notification, emergency communication and similar power-limited auxiliary functions may be run in the same conduit as initiating and signaling line circuits. All circuits shall be provided with transient suppression devices and the system shall be designed to permit simultaneous operation of all circuits without interference or loss of signals.
   5. Conduit shall not enter the fire alarm control panel, or any other remotely mounted control panel equipment or backboxes, except where conduit entry is specified by the FACP manufacturer.
   6. Contractor shall be responsible for satisfying all conduit fill requirements. Conduit cross sectional conductor fill shall not exceed 40% under any circumstances.

B. Wire:
   1. All fire alarm system wiring as installed under this contract shall be new "Fire Wire" from FACP to device.
   2. Wiring shall be in accordance with local, state and national codes (e.g., NEC Article 760) and as recommended by the manufacturer of the fire alarm system. Number and size of conductors shall be as recommended by the fire alarm system manufacturer, but not less than 14 AWG for initiating device circuits and signaling line circuits, and 14 AWG for notification appliance circuits.
   3. All wire and cable shall be listed and/or approved by a recognized testing agency for use with a protective signaling system.
   4. All field wiring shall be completely supervised.

C. Terminal Boxes, Junction Boxes and Cabinets:
   1. All boxes and cabinets shall be UL listed for their use and purpose. All junction boxes shall be painted red.
   2. Initiating circuits shall be arranged to serve like categories (manual, smoke, waterflow). Mixed category circuitry shall not be permitted except on signaling line circuits connected to intelligent reporting devices.

PART 3 EXECUTION

3.01 INSTALLATION - GENERAL

A. Provide New Architectural outline of building per floor/level in stainless steel frame noting the location of all existing and new zones. Frame will have a clear Plexiglas front and will show a floor plan of the building with all pertinent information. The floor plan will be computer generated. This contractor will be responsible for accurately verifying all existing zones and documenting on architectural outline. Install zoned building outline near existing fire alarm annunciator panels and control panel (min. 3 total).

B. Update all control and annunciator panel programing and labeling.

C. Install products in accordance with manufacturer's instructions.

D. Automatic Detector Installation: Conform to NFPA 72.

E. Detectors shall not be installed before final clean-up by all trades is complete and final except where required by the authority having jurisdiction for protection during construction.

F. Detectors that are installed before final clean-up by all trades have to be throughly cleaned by manufacturer's representative or replaced.

G. Manufacture provided covers are not acceptable for use as "protective devices" during construction.

H. Where the AHJ requires early installation of detectors, the contractor shall be responsible for having the devices throughly cleaned by a manufacture's representative or replaced.

I. Install system according to NFPA Standards referenced in Parts 1 and 2 of this Section.

J. Fire Alarm Power Supply Disconnect: Shall be painted red and labeled "FIRE ALARM. " Provide with a lockable handle or cover.

K. Manual Pull Stations: Mount semi-flush in recessed back boxes with operating handles 48 inches above finished floor or as indicated.

L. Water-Flow Detectors and Valve Supervisory Switches: Connect for each sprinkler valve station required to be supervised.

M. Smoke Detectors: Install ceiling-mounted detectors not less than 4 inches from a sidewall to the near edge. Install detectors located on the wall at least 4 inches but not more than 12 inches below the ceiling. For exposed solid joist construction, mount detectors on the bottoms of the joists. On smooth ceilings, install detectors not over 30 feet apart in any direction. Install detectors no closer than 5 feet from air registers.

N. Audible Notification Appliances: Install not less than 80 inches above the finished floor nor less than 6 inches below the ceiling. Install bells and horns on flush-mounted back boxes with the device-operating mechanism concealed behind a grille or as indicated. Combine audible and visual notification appliances at the same location into a single unit.

O. Visual Notification Appliances: Install adjacent to each alarm bell or alarm horn and not less than 80 inches above the finished floor and at least 6 inches below the ceiling.

P. Device Location-Indicating Lights: Locate in the public space immediately adjacent to the device they monitor.

Q. Fire Alarm Control Unit (FACU): Surface mount with tops of cabinets not more than 6 feet above the finished floor.

R. Graphic Annunciator: Arrange as indicated, with the top of the Unit no more than 6 feet above the finished floor.

S. All initiating and/or indicating devices installed within gymnasium shall include protective heavy duty wireguards.

3.02 FIRE ALARM WIRE AND CABLE COLOR CODE

A. Provide fire alarm circuit conductors with insulation color coded as follows, or using colored tape at each conductor termination and in each junction box.

B. Power Branch Circuit Conductors: Black, red, white.

C. Initiating Device Circuit: Black, red.

D. Detector Power Supply: Violet, brown.

E. Signal Device Circuit: Blue (positive), white (negative).

F. Door Holder/Release: Gray, gray.

G. Municipal Trip Circuit: Orange, orange.

H. Municipal Fire Alarm Loop: Black, white.

3.03 WIRING INSTALLATION (FULL METALLIC CONDUIT SYSTEM)

A. Wiring Method: Install wiring in metal raceway according to Division 16 Section "Raceways. " Conceal raceway except in unfinished spaces and as indicated.

B. This contractor may reuse existing, approved (EMT & Metallic surface raceway only), conduit; however, this contractor will be responsible for ensuring that entire fire alarm wiring system is installed within approved conduit and install new as necessary. Greenfield is expressly forbidden. Where existing Greenfield raceway is found, it will be this contractors responsibility to remove and replace with approved metallic raceway. Contractor shall throughly review existing field conditions to verify existence of unapproved raceway and include appropriate amount in base bid. No extras will be allowed for the replacement of existing, substandard raceway. Electrical Contractor shall check and be responsible for actual installation with regard to available conduit spaces provided and shall cooperate with other trades.

C. Wiring Within Enclosures: Install conductors parallel with or at right angles to the sides and back of the enclosure. Bundle, lace, and train the conductors to terminal points with no excess. Connect conductors that are terminated, spliced, or interrupted in any enclosure associated with the fire alarm system to terminal blocks. Mark each terminal according to the wiring diagrams of the system. Make all connections with approved crimp-on terminal spade lugs, pressure-type terminal blocks, or plug connectors.

D. Cable Taps: Use numbered terminal strips in junction, pull or outlet boxes, cabinets, or equipment enclosures where any circuit tap is made.

E. System Wiring: Wire and cable shall be a type listed for its intended use by an approval agency acceptable to the Authority Having Jurisdiction (AHJ) and shall be installed in accordance with the appropriate articles from the current approved edition of the National Electric Code (NEC)(NFPA 70). It is the Contractor's responsibility to obtain from the Fire Alarm System Manufacturer written instruction regarding the appropriate wire/cable to be used for this installation. No deviation from the written instruction shall be made by the Contractor without the prior written approval of the Fire Alarm System Manufacturer.

F. Color Coding: Color-code fire alarm conductors differently from the normal building power wiring. Use one color code for alarm initiating device circuits wiring and a different color code for supervisory circuits. Color-code notification appliance circuits differently from alarm-initiating circuits. Paint fire alarm system junction boxes and covers red.

G. Fan Shutdown: Air handling equipment shall be connected to relays in its' respective duct smoke detector.

H. Wiring to Central Station Transmitter: 1-inch conduit between the FACU and the central station connection as indicated. Install number of conductors and electrical supervision for connecting wiring as required to suit central-station monitoring function. Final connections to terminals in central station equipment are made under this contract.

3.04 GROUNDING

A. Ground equipment and conductor and cable shields as specified by the equipment manufacturer. Provide 5-ohm ground at main equipment location. Measure, record, and report ground resistance.

3.05 FIELD QUALITY CONTROL

A. Manufacturer's Field Services: Provide services of a factory-authorized service representative to supervise the field assembly and connection of components and the pretesting, testing, and adjustment of the system.

B. Pretesting: Upon completing installation of the system, align, adjust, and balance the system and perform complete pretesting. Determine, through pretesting, the conformance of the system to the requirements of the Drawings and Specifications. Correct deficiencies observed in pretesting. Replace malfunctioning or damaged items with new and retest until satisfactory performance and conditions are achieved. Prepare forms for systematic recording of acceptance test results.

C. Report of Pretesting: After pretesting is complete, provide a letter certifying the installation is complete and fully operable, including the names and titles of the witnesses to the preliminary tests.

D. Final Test Notice: Provide a 10-day minimum notice in writing when the system is ready for final acceptance testing.

E. Testing Procedures

1. Detailed test procedures, prepared and signed by a Registered Professional Engineer or a NICET Level 4 Fire Alarm Technician, and signed by representative of the installing company, for the fire detection and alarm system 60 days prior to performing system tests. Detailed test procedures shall list all components of the installed system such as initiating devices and circuits, notification appliances and circuits, signaling line devices and circuits, control devices/equipment, batteries, transmitting and receiving equipment, power sources/supply, annunciators, special hazard equipment, emergency communication equipment, interface equipment, Guard's Tour equipment, and transient (surge) suppressors. Test procedures shall include sequence of testing, time estimate for each test, and sample test data forms. The test data forms shall be in a check-off format (pass/fail with space to add applicable test data) and shall be used for the preliminary testing and the acceptance testing. The test data forms shall record the test results and shall:
   a. Identify the NFPA Class and Style of all Initiating Device Circuits (IDC), Notification Appliance Circuits (NAC), Voice Notification System, and Signaling Line Circuits (SLC).
   b. Identify each test required by NFPA 72 Test Methods and required test herein to be performed on each component, and describe how this test shall be performed.
   c. Identify each component and circuit as to type, location within the facility, and unique identity within the installed system. Provide necessary floor plan sheets showing each component location, test location, and alphanumeric identity.
   d. Identify all test equipment and personnel required to perform each test (including equipment necessary for testing smoke detectors using real smoke).
   e. Provide space to identify the date and time of each test. Provide space to identify the names and signatures of the individuals conducting and witnessing each test.
2. Tests Stages
   a. Preliminary Testing: Conduct preliminary tests to ensure that devices and circuits are functioning properly. Tests shall meet the requirements of paragraph entitled "Minimum System Tests." After preliminary testing is complete, provide a letter certifying that the installation is complete and fully operable. The letter shall state that each initiating and indicating device was tested in place and functioned properly.

The letter shall also state that panel functions were tested and operated properly. The letter shall include the names and titles of the witnesses to the preliminary tests. The Contractor and an authorized representative from each supplier of equipment shall be in attendance at the preliminary testing to make necessary adjustments.

b. Request for Formal Inspection and Tests: When tests have been completed and corrections made, submit a signed, dated certificate with a request for formal inspection and tests to the Naval Facilities Engineering Command, Public Works Department, Fire Protection Engineer.

c. Final Testing: Notify the Contracting Officer in writing when the system is ready for final acceptance testing. Submit request for test at least 15 calendar days prior to the test date. The tests shall be performed in accordance with the approved test procedures in the presence of the Authority Having Jurisdiction (AHJ) . The Contractor l furnish instruments and personnel required for the tests. A final acceptance test will not be scheduled until the operation and maintenance (O&M) manuals are furnished to the Owner/Architect and the following are provided at the job site:

1) The systems manufacturer's technical representative
2) Marked-up red line drawings of the system as actually installed
3) Megger test results
4) Loop resistance test results
5) Complete program printout including input/output addresses

3. The final tests shall be witnessed by the Authority Having Jurisdiction (AHJ). At this time, any and all required tests shall be repeated at their discretion. Following acceptance of the system, as-built drawings and O&M manuals shall be delivered to the Contracting Officer for review and acceptance. In existing buildings, the transfer of devices from the existing system to the new system and the permission to begin demolition of the old fire alarm system will not be permitted until the as-built drawings and O&M manuals are received.

F. Minimum System Tests

1. Test the system in accordance with the procedures outlined in NFPA 72, ISO 7240-16, IEC 60268-16. The required tests are as follows:

a. Megger Tests: After wiring has been installed, and prior to making any connections to panels or devices, wiring shall be megger tested for insulation resistance, grounds, and/or shorts. Conductors with 300 volt rated insulation shall be tested at a minimum of 250 VDC. Conductors with 600 volt rated insulation shall be tested at a minimum of 500 VDC. The tests shall be witnessed by the Contracting Officer and test results recorded for use at the final acceptance test.

b. Loop Resistance Tests: Measure and record the resistance of each circuit with each pair of conductors in the circuit short-circuited at the farthest point from the circuit origin. The tests shall be witnessed by the Contracting Officer and test results recorded for use at the final acceptance test.

c. Verify the absence of unwanted voltages between circuit conductors and ground. The tests shall be accomplished at the preliminary test with results available at the final system test.

d. Verify that the control unit is in the normal condition as detailed in the manufacturer's O&M manual.

e. Test each initiating and indicating device and circuit for proper operation and response at the control unit. Smoke sensors shall be tested in accordance with manufacturer's recommended calibrated test method. Use of magnets is prohibited. Testing of duct smoke detectors shall comply with the requirements of NFPA 72.

f. Test the system for specified functions in accordance with the contract drawings and specifications and the manufacturer's O&M manual.

g. Test both primary power and secondary power. Verify, by test, the secondary power system is capable of operating the system for the time period and in the manner specified.
h. Determine that the system is operable under trouble conditions as specified.
i. Visually inspect wiring.
j. Test the battery charger and batteries.
k. Verify that software control and data files have been entered or programmed into the FACP. Hard copy records of the software shall be provided to the Contracting Officer.
l. Verify that red-line drawings are accurate.
m. Measure the current in circuits to ensure there is the calculated spare capacity for the circuits.
n. Measure voltage readings for circuits to ensure that voltage drop is not excessive.
o. Disconnect the verification feature for smoke sensors during tests to minimize the amount of smoke needed to activate the sensor. Testing of smoke sensors shall be conducted using real smoke. The use of canned smoke is prohibited.
p. Measure the voltage drop at the most remote appliance (based on wire length) on each notification appliance circuit.
q. Audibility Intelligibility testing of the Voice Evacuation Notification System shall be accomplished iaw NFPA 72 for Voice Evacuation Systems, IEC 60268-16, and ASA S3.2.
r. Opening the circuit at not less than 25% of alarm initiating devices and notification appliances to test the wiring supervisory feature.
s. The contractor shall demonstrate modem communications with remote sites as specified by the COR. Dial in capability shall also, be demonstrated, using specified security.
t. The contractor shall demonstrate fiber optic communications with remote sites as specified by the COR. Dial in capability shall also, be demonstrated, using specified security.

G. Retesting: Correct deficiencies indicated by tests and completely retest work affected by such deficiencies. Verify by the system test that the total system meets the Specifications and complies with applicable standards.

H. Report of Tests and Inspections: Provide a written record of inspections, tests, and detailed test results in the form of a test log. Submit log upon the satisfactory completion of tests.

I. Tag all equipment, stations, and other components at which tests have been satisfactorily completed.

J. Final Test, Certificate of Completion, and Certificate of Occupancy:
1. Test the system as required by the Authority Having Jurisdiction in order to obtain a certificate of occupancy. Demonstrate that the system meets the Specifications and complies with applicable standards. This final test shall be witnessed by a representative of the Authority Having Jurisdiction and a factory-authorized service representative.

3.06 CLEANING AND ADJUSTING

A. Cleaning: Remove paint splatters and other spots, dirt, and debris. Touch up scratches and mars of finish to match original finish. Clean unit internally using methods and materials recommended by manufacturer.

B. Occupancy Adjustments: When requested within one year of date of Substantial Completion, provide on-site assistance in adjusting sound levels and adjusting controls and sensitivities to suit actual occupied conditions. Provide up to three visits to the site for this purpose.

3.07 SOFTWARE MODIFICATIONS

A. Provide the services of a factory trained and authorized technician to perform all system software modifications, upgrades or changes. Response time of the technician to the site shall not exceed 4 hours.

B. Provide all hardware, software, programming tools and documentation necessary to modify the fire alarm system on site. Modification includes addition and deletion of devices, circuits, zones and changes to system operation and custom label changes for devices or zones. The system structure and software shall place no limit on the type or extent of software modifications on-site. Modification of software shall not require power-down of the system or loss of system fire protection while modifications are being made.

3.08 INSTRUCTION MANUALS

A. The Contractor shall provide, in addition to one approved copy of the fire alarm system submittal, complete operating instructions; pertinent system orientation documents; and system service, testing, and alarm documentation in the fire control area for the Owner's and fire department's permanent use.

3.09 INSTRUCTION OF OWNER

A. Equipment manufacturer shall provide 3 days on site and 5 days of technical training to the Government at the manufacturing facility. Training shall allow for classroom instruction as well as individual hands on programming, troubleshooting and diagnostics exercises. Room and board costs shall be included for two Government personnel. Factory training shall occur within 6 months of system acceptance.

B. Instructor
   1. Include in the project the services of an instructor, who shall have received specific training from the manufacturer for the training of other persons regarding the inspection, testing, and maintenance of the system provided. The instructor shall train the Government employees designated by the Contracting Officer, in the care, adjustment, maintenance, and operation of the fire alarm and fire detection system.

C. Qualifications
   1. Each instructor shall be thoroughly familiar with all parts of this installation. The instructor shall be trained in operating theory as well as in practical O&M work.

D. Required Instruction Time
   1. Provide 16 hours of instruction after final acceptance of the system. The instruction shall be given during regular working hours on such dates and times as are selected by the Contracting Officer. The instruction may be divided into two or more periods at the discretion of the Contracting Officer. The training shall allow for rescheduling for unforeseen maintenance and/or fire department responses.

3.10 GUARANTEE

A. The electrical Contractor shall guarantee all wiring and terminal equipment to be free from inherent and mechanical defects due to workmanship and materials used for a period of one (1) year from date of final acceptance.

B. The fire alarm manufacturer, and not distributor or electrical Contractor, shall furnish in writing a one (1) year warranty. Warranty shall list all equipment in the system and state that equipment to be free from inherent and mechanical defects due to workmanship and materials for a period of one (1) year from date of start up and beneficial use of the system.

C. Warranty service for the equipment shall be provided by the system supplier's factory trained representative. Emergency service provided 24 hours per day 7 days per week shall be available from the same source at no additional cost to the Owner during warranty period.

D. The guarantee will cover entire systems (electronic components, wiring, software, peripheral devices, etc.). The guarantee will be structured such that any system malfunction during the

first year from system initial acceptance will be completely repaired within a reasonable period at no additional cost in money or labor. In addition, this guarantee shall cover one annual cleaning and servicing of all equipment. At a minimum, the system servicing shall occur once during the period of this contract: end of 1st year. Service shall include a complete functional test and cleaning of all devices.

END OF SECTION

GENERAL STRUCTURAL NOTES

BUILDING CODES USED FOR DESIGN

1. INTERNATIONAL BUILDING CODE, 2015 EDITION

DESIGN LOADS

1. DESIGN LIVE LOADS:	
PUBLIC AREAS, 1ST FLOOR CORRIDORS & STAIRS	100 PSF
ROOFS	20 PSF
2. ROOF SNOW:	
GROUND SNOW LOAD	25 PSF
FLAT-ROOF SNOW LOAD	30 PSF***
SNOW EXPOSURE FACTOR	1.0
SNOW IMPORTANCE FACTOR	1.1
THERMAL FACTOR	1.0
3. WIND:	
BASIC WIND SPEED	120 MPH
WIND EXPOSURE	B
INTERNAL PRESSURE COEFFICIENT	±0.18
4. SEISMIC:	
SEISMIC IMPORTANCE FACTOR	1.25
USE GROUP	III
S_S	0.151
S_1	0.064
SITE CLASS	D
S_{DS}	0.161
S_{D1}	0.102
DESIGN CATEGORY	B
BASIC RESISTING SYSTEM	ORMSW
RESPONSE MODIFICATION COEFFICIENT	2.0
ANALYSIS PROCEDURE	ELF

*** PLUS DRIFTING AND/OR SLIDING SNOW

NEW WORK IN CONJUNCTION WITH EXISTING CONSTRUCTION

1. THE CONTRACTOR SHALL VERIFY, BY FIELD CHECK, ALL SIZES, DIMENSIONS, ELEVATIONS, LOCATIONS, ETC. OF ELEMENTS OF THE EXISTING CONSTRUCTION WHICH ARE RELATIVE TO THE NEW CONSTRUCTION.
2. ALL DIMENSIONS INVOLVING NEW WORK TYING INTO OR GOVERNED BY EXISTING CONSTRUCTION SHALL BE FIELD CHECKED BY THE CONTRACTOR AND FURNISHED TO THE SUBCONTRACTOR, PRIOR TO FABRICATION OF ANY WORK. THE VERIFIED DIMENSIONS SHALL APPEAR AND BE NOTED AS SUCH ON THE FIRST SHOP DRAWING SUBMITTED.
3. THE ENGINEER HAS MADE ASSUMPTIONS CONCERNING THE SOUNDNESS OF THE EXISTING BUILDING AND THESE ASSUMPTIONS ARE THAT THIS BUILDING WAS DESIGNED AND CONSTRUCTED IN CONFORMITY WITH GOOD DESIGN AND CONSTRUCTION PRACTICES. THE CONTRACTOR SHALL TAKE EXTRAORDINARY PRECAUTIONS CONCERNING PRESERVATION OF THE BUILDING DURING DEMOLITION AND NEW CONSTRUCTION WORK. FURTHER, HE SHALL AGREE TO ASSUME ALL RESPONSIBILITY FOR THE PRESERVATION OF THIS PROPERTY.
4. THE CONTRACTOR SHALL NOTIFY THE ARCHITECT/ENGINEER IMMEDIATELY OF ANY DISCREPANCIES BETWEEN CONSTRUCTION DOCUMENTS AND ACTUAL FIELD CONDITIONS.

NEW CONSTRUCTION

1. THE CONTRACTOR SHALL FOLLOW WRITTEN DIMENSIONS ONLY. DO NOT SCALE DRAWINGS.
2. ALL DETAILS AND SECTIONS SHOWN ON THE DRAWINGS ARE INTENDED TO BE CONSTRUED TO APPLY AT ANY SIMILAR CONDITION ELSEWHERE ON THE JOB EXCEPT WHERE A DIFFERENT DETAIL OR SECTION IS SHOWN.
3. THE CONTRACTOR SHALL VERIFY ALL DIMENSIONS AND ELEVATIONS WITH THE ARCHITECTURAL DRAWINGS. WHERE DISCREPANCIES OCCUR, IT IS THE CONTRACTOR'S RESPONSIBILITY TO NOTIFY THE ARCHITECT PRIOR TO CONSTRUCTION.

LEGAT ARCHITECTS
SUSTAINABILITY | PERFORMANCE | DESIGN

College of DuPage

P.E. ARENA BASKETBALL COURT RENOVATION

**425 Fawell Blvd.
Glen Ellyn, IL
60137**

Legat Architects
651 W. Washington Blvd., Suite 1
Chicago, IL
P. 312.258.9595

www.legat.com

Larson Engineering Inc
1488 Bond Street, Suite 100
Naperville, Illinois 60563-6503
(P) 630.357.0540 (F) 630.357.0164
ILLINOIS LICENSE NO. 184-001442
LEI Comm. No. 21170705.000

As indicated

N

GENERAL NOTES

ISSUED FOR BID

PROJECT NUMBER IN18-0008
DATE OF ISSUE 2.05.2018

S-100

STRUCTURAL STEEL

1. FABRICATION AND ERECTION OF STRUCTURAL STEEL MEMBERS SHALL BE IN ACCORDANCE WITH THE AISC "CODE OF STANDARD PRACTICE FOR STEEL BUILDINGS AND BRIDGES" AS INDICATED IN THE THIRTEENTH EDITION OF THE "MANUAL OF STEEL CONSTRUCTION" FOR ALLOWABLE STRESS DESIGN UNLESS NOTED OTHERWISE.
2. ALL STRUCTURAL STEEL SHALL CONFORM TO THE FOLLOWING STANDARDS:
   STEEL ANGLES AND RODS ASTM A36
3. ALL FILLER METAL USED IN WELDING SHALL BE 70 KSI YIELD, LOW-HYDROGEN.
4. ALL WELDING SHALL BE BY CERTIFIED WELDERS AND SHALL CONFORM TO THE "STRUCTURAL WELDING CODE", AWS D1.1 AND MEET AISC MINIMUM REQUIREMENTS FOR WELD SIZE.
5. UNLESS NOTED OTHERWISE, STRUCTURAL STEEL SUPPLIER IS TO FURNISH L5x3$^{1}/_{2}$x$^{5}/_{16}$ LLV SHOP WELDED ANGLE FRAMES AT ALL FLOOR AND ROOF OPENINGS. VERIFY SIZE AND LOCATION WITH MECHANICAL (M/E/P/FP) CONTRACTOR. NOT ALL OPENINGS REQUIRING FRAMES SHOWN ON DRAWINGS. NO EXTRAS FOR ADDITIONAL FRAMES WILL BE APPROVED DUE TO FAILURE OF GC TO COORDINATE BETWEEN TRADES.
6. ALL STRUCTURAL STEEL AND MISCELLANEOUS METALS SHALL BE PRIME PAINTED WITH ONE COAT OF FABRICATOR'S STANDARD RUST-INHIBITIVE PRIMER OR AS INDICATED IN THE PROJECT SPECIFICATION. TOUCH UP ALL DISTURBED AREAS AFTER ERECTION. STEEL TO BE FIREPROOFED SHALL RECEIVE PAINT/FINISH PROCESS COMPATIBLE WITH FIREPROOFING.

SHOP DRAWINGS

1. SHOP DRAWINGS, UNLESS NOTED OTHERWISE, SHALL BE SUBMITTED FOR REVIEW PRIOR TO FABRICATION IN ACCORDANCE WITH THE PROJECT SPECIFICATIONS.
2. PRIOR TO SUBMITTAL, THE CONTRACTOR SHALL REVIEW THE SHOP DRAWINGS AND MAKE ANY CORRECTIONS REQUIRED. THE CONTRACTOR SHALL STAMP AND SIGN THE DRAWINGS THAT HE HAS REVIEWED THEM. ANY SHOP DRAWINGS RECEIVED WITHOUT THE CONTRACTOR'S SIGNED REVIEW STAMP SHALL BE IMMEDIATELY RETURNED WITHOUT ENGINEER'S REVIEW.
3. SHOP DRAWINGS SHALL BE FURNISHED FOR ALL STRUCTURAL COMPONENTS. ALL SUBMITTALS TO BE TWO (2) SETS PRINTS AND ONE (1) SET REPRODUCIBLES ONLY.

SPECIAL INSPECTIONS:

THE FOLLOWING INSPECTION REQUIREMENTS ARE IN ADDITION TO THE INSPECTIONS REQUIRED BY SECTION 109 OF THE IBC. SPECIAL INSPECTIONS SHALL BE PERFORMED BY A QUALIFIED INSPECTOR APPROVED BY THE ARCHITECT AND BUILDING OFFICIAL. SPECIAL INSPECTIONS SHALL BE PERFORMED BY A QUALIFIED INSPECTOR UNDER THE DIRECT SUPERVISION OF A STATE REGISTERED STRUCTURAL ENGINEER WHO IS FAMILIAR WITH THE STRUCTURAL DESIGN OF THIS PROJECT. THE SPECIAL INSPECTION CERTIFICATE SHALL BE SEALED BY THE SUPERVISING STRUCTURAL ENGINEER. THE CONTRACTOR SHALL BE RESPONSIBLE FOR PROVIDING A MINIMUM 24 HOUR NOTICE TO THE SPECIAL INSPECTOR AND THE TESTING LABORATORY PRIOR TO BEGINNING ANY WORK FOR WHICH SPECIAL INSPECTION OR TESTING IS REQUIRED. SPECIAL INSPECTION IS REQUIRED DURING THE FOLLOWING OPERATIONS PER IBC CHAPTER 17.

1. WELDING:
   VISUAL INSPECTION OF ALL STRUCTURAL FIELD WELDING AND SHOP WELDING (INCLUDING WELDING OF REINFORCING STEEL). FULL PENETRATION WELDS SHALL BE TESTED AND CERTIFIED BY AN INDEPENDENT TESTING AGENCY.
   EXCEPTION: WELDING DONE IN AN APPROVED FABRICATOR'S SHOP IN ORDNANCE WITH IBC SECTION 1704.3.1 DOES NOT REQUIRE SPECIAL INSPECTION.

DUTIES AND RESPONSIBILITIES OF THE SPECIAL INSPECTOR:

THE SPECIAL INSPECTOR SHALL OBSERVE THE WORK ASSIGNED FOR CONFORMANCE WITH THE APPROVED DESIGN DRAWINGS AND SPECIFICATIONS. THE SPECIAL INSPECTOR SHALL FURNISH INSPECTION REPORTS TO THE BUILDING OFFICIAL AND TO THE ENGINEER AND ARCHITECT OF RECORD. ALL DISCREPANCIES SHALL BE BROUGHT TO THE IMMEDIATE ATTENTION OF THE CONTRACTOR FOR CORRECTION. THEN, IF THE DISCREPANCY IS UNCORRECTED IT SHALL BE BROUGHT TO THE ATTENTION OF THE ENGINEER, ARCHITECT OF RECORD AND THE BUILDING OFFICIAL. UPON COMPLETION OF THE ASSIGNED WORK THE SPECIAL INSPECTOR SHALL COMPLETE AND SIGN A FINAL REPORT CERTIFYING THAT TO THE BEST OF THE INSPECTOR'S KNOWLEDGE. THE WORK IS IN CONFORMANCE WITH THE APPROVED PLANS AND SPECIFICATIONS AND THE APPLICABLE WORKMANSHIP PROVISIONS OF THE CODE.

LEGAT ARCHITECTS
SUSTAINABILITY | PERFORMANCE | DESIGN

College of DuPage

P.E. ARENA BASKETBALL COURT RENOVATION

**425 Fawell Blvd.
Glen Ellyn, IL
60137**

Legat Architects
651 W. Washington Blvd., Suite 1
Chicago, IL
P. 312.258.9595

www.legat.com

Larson Engineering Inc
1488 Bond Street, Suite 100
Naperville, Illinois 60563-6503
(P) 630.357.0540 (F) 630.357.0164
ILLINOIS LICENSE NO. 184-001442
LEI Comm. No. 21170705.000

As indicated N

GENERAL NOTES

ISSUED FOR BID

PROJECT NUMBER IN18-0008
DATE OF ISSUE 2.05.2018

S-101

STRUCTURAL ABBREVIATIONS

AB	ANCHOR BOLT
ADDL	ADDITIONAL
ADJ	ADJACENT
AFF	ABOVE FINISH FLOOR
AHU	AIR HANDLING UNIT
ALUM	ALUMINUM
ALT	ALTERNATE
APPROX	APPROXIMATE(LY)
ARCH	ARCHITECT/ARCHITECTURAL
B/B	BACK TO BACK
BL	BRICK LEDGE
BLDG	BUILDING
BM	BEAM
BOS	BOTTOM OF STEEL
BOT	BOTTOM
BRG	BEARING
BRDG	BRIDGING
BSMT	BASEMENT
BS	BOTH SIDES
C	COMPRESSION
CA	CAISSON
CH	CHANNEL
CIP	CAST-IN-PLACE CONCRETE
CJ	CONTRACTION/CONSTRUCTION JOINT
CL	CENTER LINE
CLG	CEILING
CLR	CLEAR
CM	CONSTRUCTION MANAGER
CMU	CONCRETE MASONRY UNIT
COL	COLUMN
CONC	CONCRETE
CONF	CONFERENCE
CONN	CONNECTION
CONST	CONSTRUCTION
CONT	CONTINUE (D) (OUS)
CONTR	CONTRACTOR
COORD	COORDINATE
CTR	CENTER
DBA	DEFORMED BAR ANCHOR
DBL	DOUBLE
DEMO	DEMOLITION
DET	DETAIL
DIA	DIAMETER
DIAG	DIAGONAL
DIM	DIMENSION (S)
DL	DEAD LOAD
DP	DRILLED PIER
DWG	DRAWING
DWL	DOWEL
E	MODULUS OF ELASTICITY
EA	EACH
ECC	ECCENTRICITY
EF	EACH FACE
EJ	EXPANSION JOINT
EL	ELEVATION
EOR	ENGINEER OF RECORD
EOS	EDGE OF SLAB
EQ	EQUAL
EQUIV	EQUIVALENT
EQUIP	EQUIPMENT
EW	EACH WAY
EWEF	EACH WAY EACH FACE
EXC	EXCAVATE
EXIST	EXISTING
EXP	EXPANSION
EXP BT	EXPANSION BOLT
EXT	EXTERIOR
F/F	FACE TO FACE
FAB	FABRICATOR
FD	FLOOR DRAIN
FDTN	FOUNDATION
FIN FLR	FINISHED FLOOR
FLR	FLOOR
FOC	FACE OF CONCRETE
FOW	FACE OF WALL
FP	FIREPROOFING
FS	FAR SIDE
FSTNR	FASTENER
FT,	FEET OR FOOT
FTG	FOOTING
GA	GAUGE
GALV	GALVANIZED
GR BM	GRADE BEAM
GC	GENERAL CONTRACTOR
GEN	GENERAL
GL	GLUE LAMINATE TIMBER
GR	GRADE
GRTG	GRATING
GYP	GYPSUM
HORIZ	HORIZONTAL
HK	HOOK
HS	HEADED STUD
HT	HEIGHT
I	MOMENT OF INERTIA
IBC	INTERNATIONL BUILDING CODE
ID	INSIDE DIAMETER
IN, "	INCH OR INCHES
INCL	INCLUDE
INFO	INFORMATION
IN-LB	INCH POUND
INSUL	INSULATION
INT	INTERIOR
JF	JOINT FILLER
JST	JOIST
JT	JOINT
K	KIP (OR 1000 POUNDS)
KLF	KIPS PER LINEAR FOOT
L	ANGLE
LATL	LATERAL
LB, #	POUNDS
LF	LINEAR FOOT
LH	LEFT HAND
LL	LIVE LOAD
LLH	LONG LEG HORIZONTAL
LLV	LONG LEG VERTICAL
LT GA	LIGHT GAUGE
LT WT	LIGHT WEIGHT
LVL	LAMINATED VENEER LUMBER
M	MOMENT
MATL	MATERIAL
MAU	MAKE-UP AIR UNIT
MAX	MAXIMUM
MECH	MECHANICAL
MEP	MECHANICAL ELECTRICAL PLUMBING
MEZZ	MEZZANINE
MFR	MANUFACTURER
MFR REC	MANUFACTURER'S RECOMMENDATIONS
MIN	MINIMUM
MISC	MISCELLANEOUS
MO	MASONRY OPENING
MP	METAL PANEL
MTL	METAL
NA	NOT APPLICABLE
NIC	NOT IN CONTRACT
NO, #	NUMBER
NOM	NOMINAL
NS	NEAR SIDE
NTS	NOT TO SCALE
NWC	NORMAL WEIGHT CONCRETE
OC	ON CENTER
OD	OUTSIDE DIAMETER
OH	OPPOSITE HAND
OPNG	OPENING
OPP	OPPOSITE
PC	PRECAST CONCRETE
PCC	PVC
PCF	POUNDS PER CUBIC FOOT
PL	PLATE
PLF	POUNDS PER LINEAR FOOT
PLYWD	PLYWOOD
PREFAB	PREFABRICATED
PRELIM	PRELIMINARY
PSF	POUND PER SQUARE FOOT
PSI	POUND PER SQUARE INCH
PT	POST TENSIONED
QTY	QUANTITY
R	RADIUS
RD	ROOF DRAIN
REBAR	REINFORCING STEEL BAR
REF	REFERENCE
REINF	REINFORCE (D) (MENT)
REQ	REQUIRE (D)
REV	REVISED/REVISION
RH	RIGHT HAND
RTU	ROOF TOP UNIT
SCHED	SCHEDULE
SECT	SECTION
SF	SQUARE FOOT
SHT	SHEET
SIM	SIMILAR
SL	SNOW LOAD
SOG	SLAB ON GRADE
SPA	SPACES
SPEC	SPECIFICATION
SST	STAINLESS STEEL
STD	STANDARD
STL	STEEL
STRUCT	STRUCTURAL
T&B	TOP AND BOTTOM
T&G	TONGUE AND GROVE
TOC	TOP OF CONCRETE
TOF	TOP OF FOOTING
TOFDTN	TOP OF FOUNDATION
TOP	TOP OF PLANK
TOS	TOP OF SLAB, TOP OF STEEL
T	TENSION
TCX	TOP CHORD EXTENSION
TD	TRENCH DRAIN
THK	THICK
THRU	THROUGH
TYP	TYPICAL
UNO	UNLESS NOTED OTHERWISE
V	SHEAR
VAR	VARIES
VERT	VERTICAL
VIF	VERIFY IN FIELD
W/	WITH
W/O	WITHOUT
WD	WOOD
WP	WORK POINT
WS	WATERSTOP
WT	WEIGHT
WWR	WELDED WIRE REINFORCEMENT

LEGAT ARCHITECTS
SUSTAINABILITY | PERFORMANCE | DESIGN

College of DuPage

P.E. ARENA BASKETBALL COURT RENOVATION

425 Fawell Blvd.
Glen Ellyn, IL
60137

Legat Architects
651 W. Washington Blvd., Suite 1
Chicago, IL
P. 312.258.9595

www.legat.com

Larson Engineering Inc
1488 Bond Street, Suite 100
Naperville, Illinois 60563-6503
(P) 630.357.0540 (F) 630.357.0164
ILLINOIS LICENSE NO. 184-001442
LEI Comm. No. 21170705.000

As indicated

N

GENERAL NOTES

ISSUED FOR BID

PROJECT NUMBER IN18-0008
DATE OF ISSUE 2.05.2018

S-102

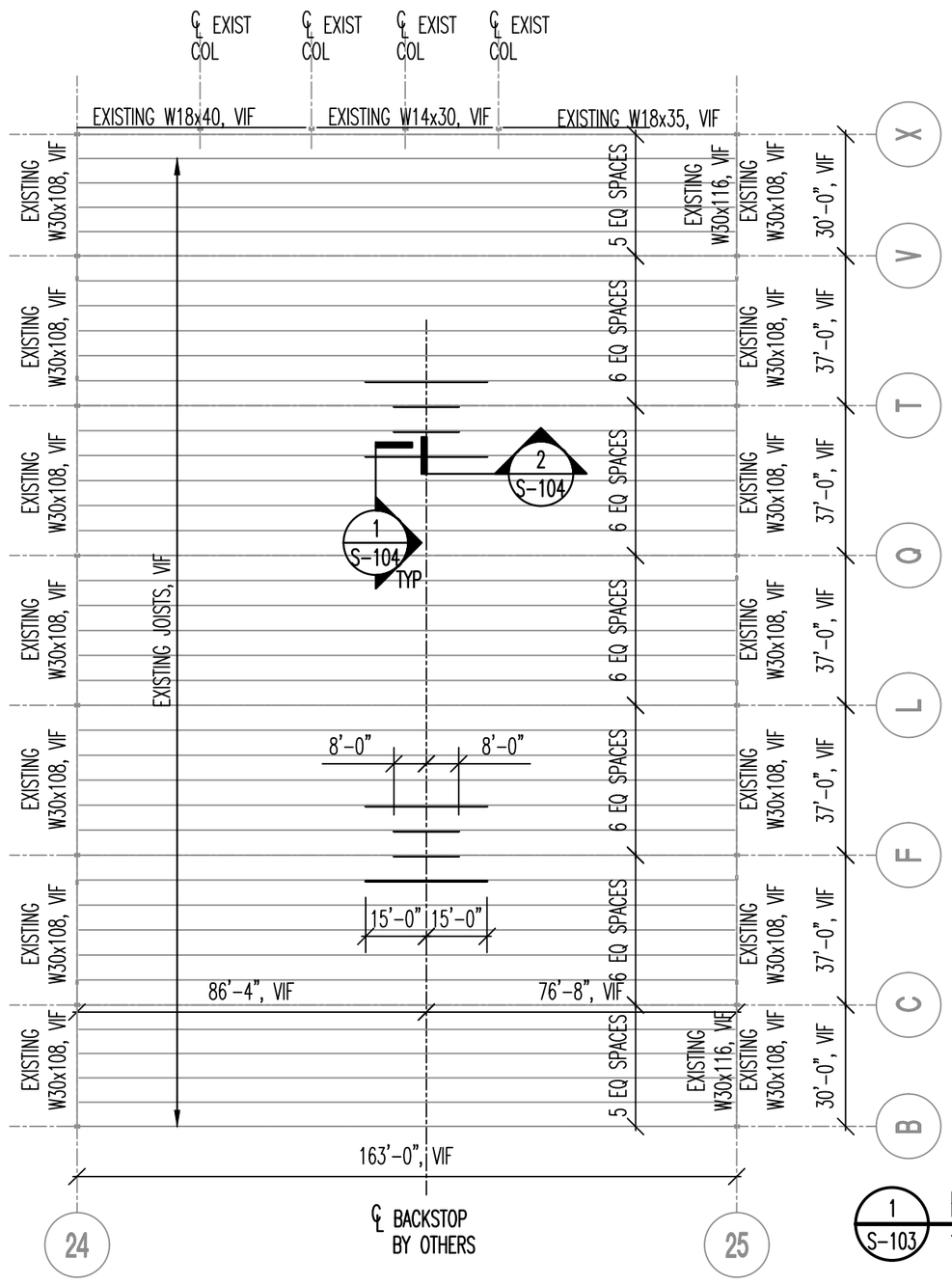

1 S-103 ROOF FRAMING PLAN
1/32" = 1'-0"

LEGAT ARCHITECTS
SUSTAINABILITY | PERFORMANCE | DESIGN

College of DuPage
P.E. ARENA BASKETBALL COURT RENOVATION

425 Fawell Blvd.
Glen Ellyn, IL
60137

Legat Architects
651 W. Washington Blvd., Suite 1
Chicago, IL
P. 312.258.9595

www.legat.com

Larson Engineering Inc
1488 Bond Street, Suite 100
Naperville, Illinois 60563-6503
(P) 630.357.0540 (F) 630.357.0164
ILLINOIS LICENSE NO. 184-001442
LEI Comm. No. 21170705.000

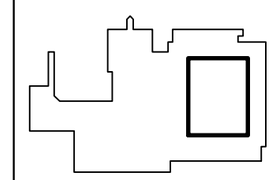

As indicated

N

ROOF FRAMING PLAN

ISSUED FOR BID

PROJECT NUMBER IN18-0008
DATE OF ISSUE 2.05.2018

S-103

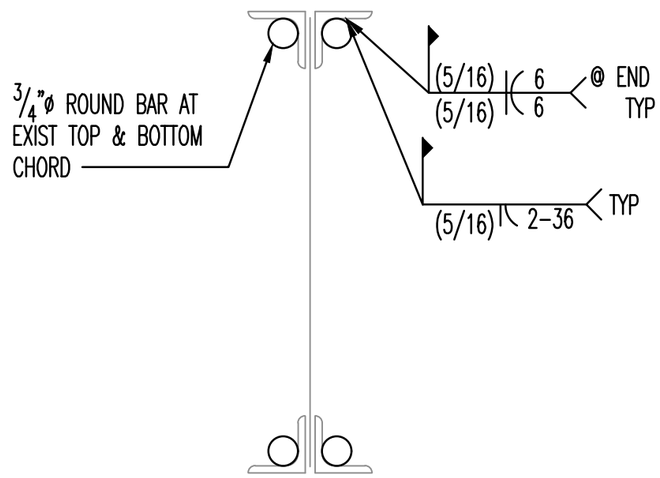

1 S-104 REINF EXIST CHORD
NO SCALE

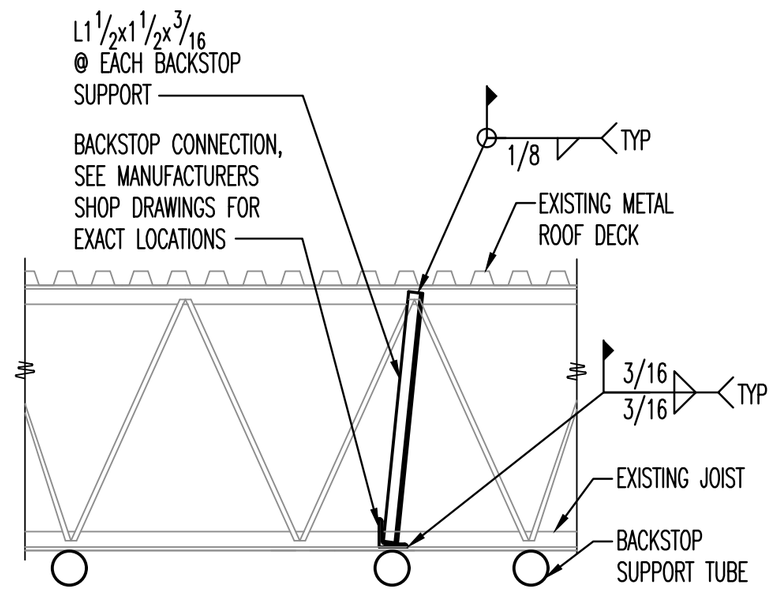

2 S-104 PANEL POINT REINFORCING
NO SCALE

LEGAT ARCHITECTS
SUSTAINABILITY | PERFORMANCE | DESIGN

College of DuPage

P.E. ARENA BASKETBALL COURT RENOVATION

425 Fawell Blvd.
Glen Ellyn, IL
60137

Legat Architects
651 W. Washington Blvd., Suite 1
Chicago, IL
P. 312.258.9595

www.legat.com

Larson Engineering Inc
1488 Bond Street, Suite 100
Naperville, Illinois 60563-6503
(P) 630.357.0540 (F) 630.357.0164
ILLINOIS LICENSE NO. 184-001442
LEI Comm. No. 21170705.000

As indicated

N

DETAILS

ISSUED FOR BID

PROJECT NUMBER IN18-0008
DATE OF ISSUE 2.05.2018

S-104

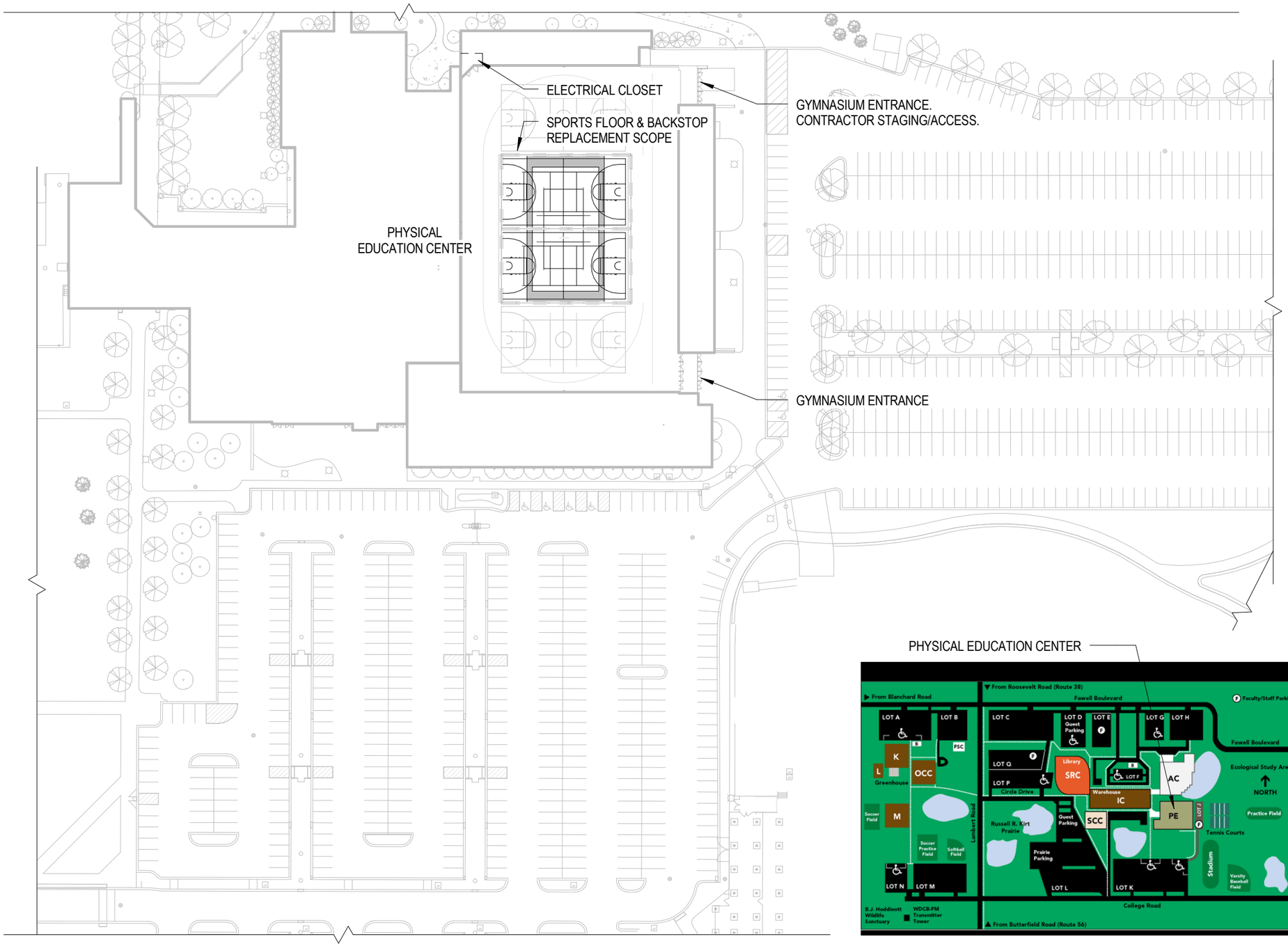

PHYSICAL EDUCATION CENTER

1 SITE PLAN

1" = 80'-0"

LEGATARCHITECTS

SUSTAINABILITY | PERFORMANCE | DESIGN

College of DuPage

P.E. ARENA BASKETBALL COURT RENOVATION

425 Fawell Blvd.
Glen Ellyn, IL 60137

Legat Architects

651 W. Washington Blvd., Suite 1
Chicago, IL
P. 312.258.9595

www.legat.com

Scale:
1" = 80'-0"

N

SITE PLAN

PROJECT NUMBER 218051.00
DATE OF ISSUE 2.5.2018

AS001

ISSUE FOR BID

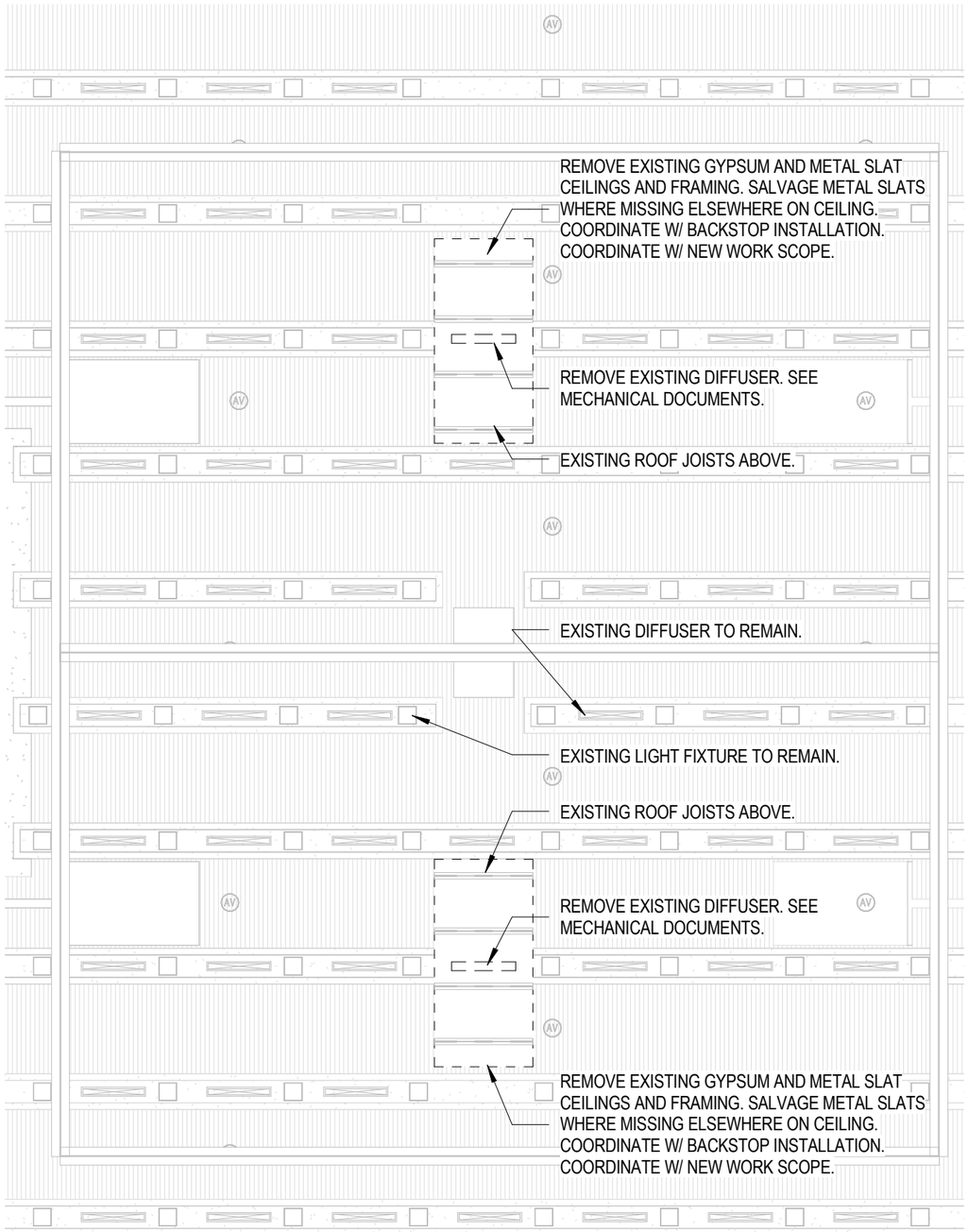

2 DEMOLITION REFLECTED CEILING PLAN

1/16" = 1'-0"

N

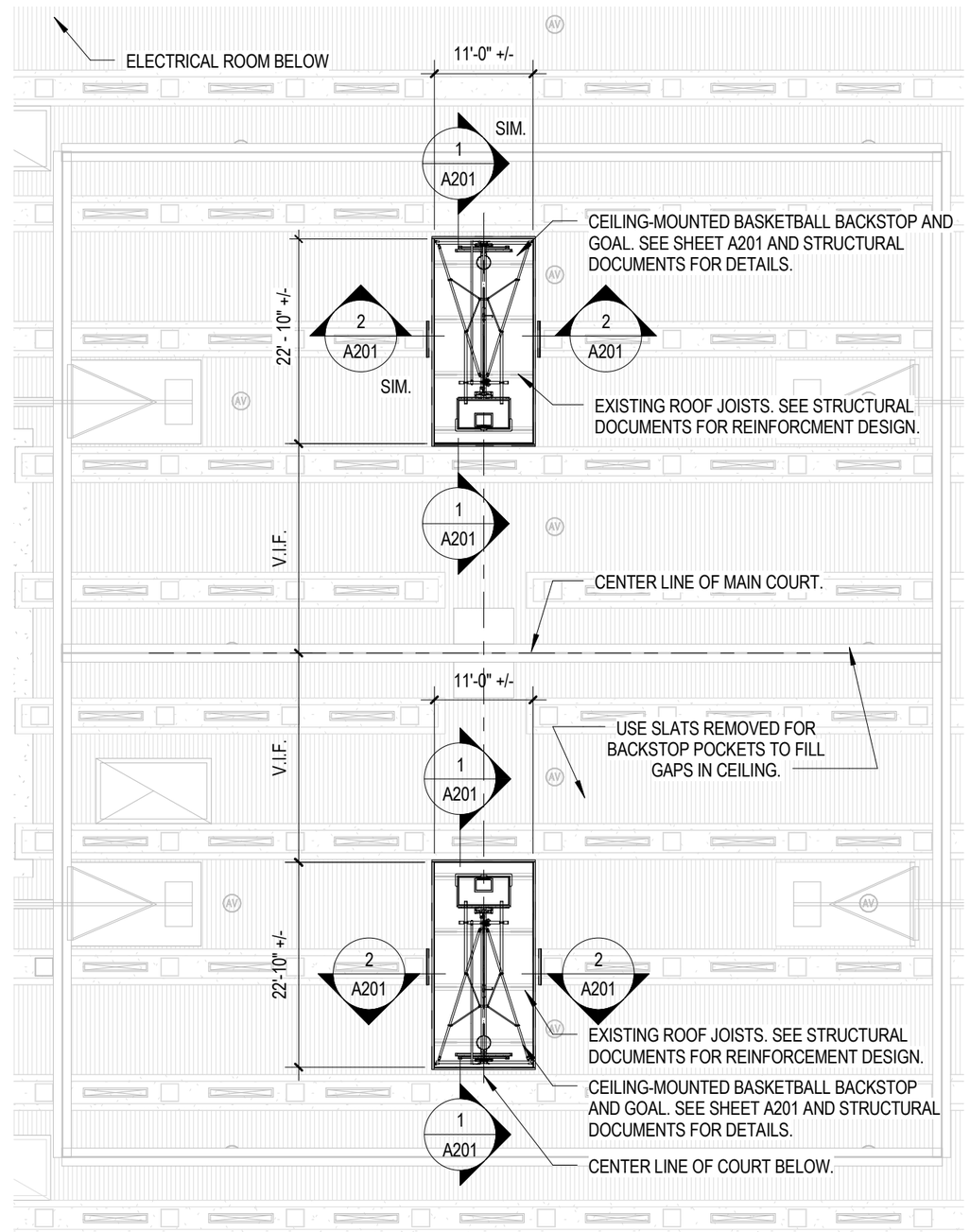

1 REFLECTED CEILING PLAN

1/16" = 1'-0"

N

LEGATARCHITECTS
SUSTAINABILITY | PERFORMANCE | DESIGN

College of DuPage

P.E. ARENA BASKETBALL COURT RENOVATION

425 Fawell Blvd.
Glen Ellyn, IL 60137

Legat Architects
651 W. Washington Blvd., Suite 1
Chicago, IL
P. 312.258.9595

www.legat.com

Key Plan

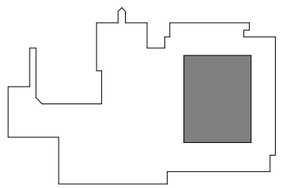

Scale:
As indicated

N

REFLECTED CEILING PLAN

PROJECT NUMBER 218051.00
DATE OF ISSUE 2.5.2018

AC101

ISSUE FOR BID

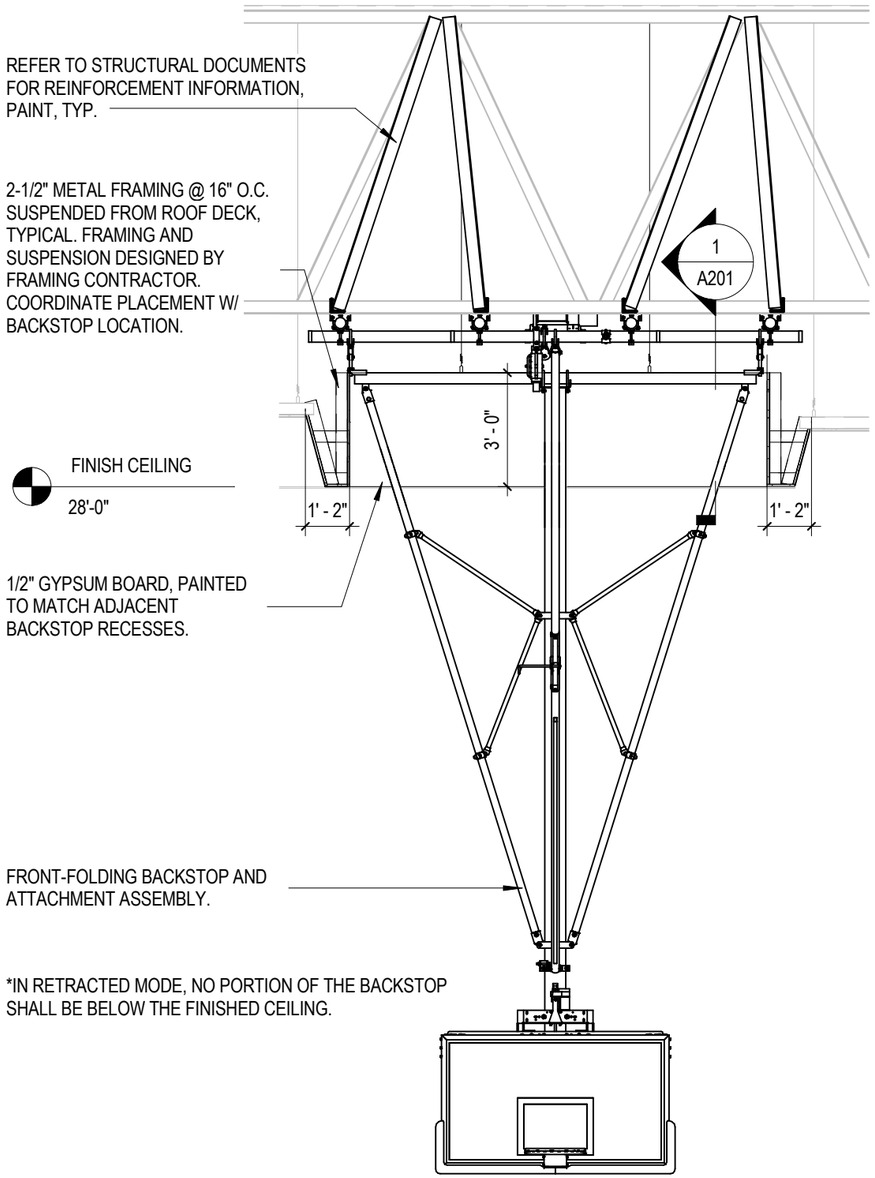

2 TRANSVERSE SECTION - BACKSTOP

1/4" = 1'-0"

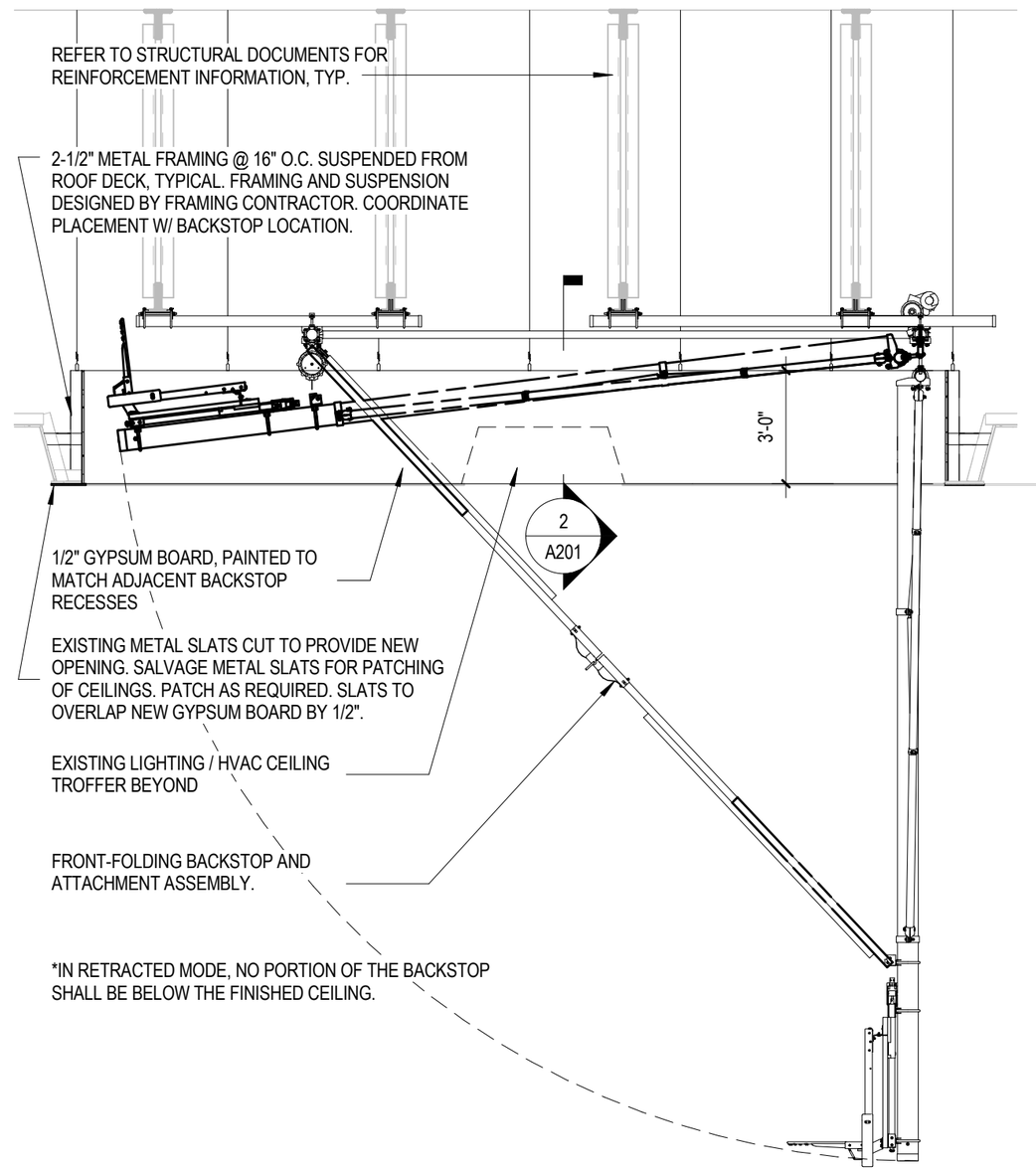

1 LONGITUDINAL SECTION - BACKSTOP

1/4" = 1'-0"

INSTALL ALL SALVAGED METAL SLATS IN MISSING LOCATIONS ON CEILING. EXAMPLE LOCATIONS SHOWN IN PHOTO.

INSTALL ALL SALVAGED METAL SLATS IN MISSING LOCATIONS ON CEILING. EXAMPLE LOCATIONS SHOWN IN PHOTO.

LEGAT ARCHITECTS
SUSTAINABILITY | PERFORMANCE | DESIGN

College of DuPage

P.E. ARENA BASKETBALL COURT RENOVATION

425 Fawell Blvd.
Glen Ellyn, IL 60137

Legat Architects
651 W. Washington Blvd., Suite 1
Chicago, IL
P. 312.258.9595
www.legat.com

Scale:
1/4" = 1'-0"

N

BACKSTOP DETAILS

PROJECT NUMBER 218051.00
DATE OF ISSUE 2.5.2018

A201

ISSUE FOR BID

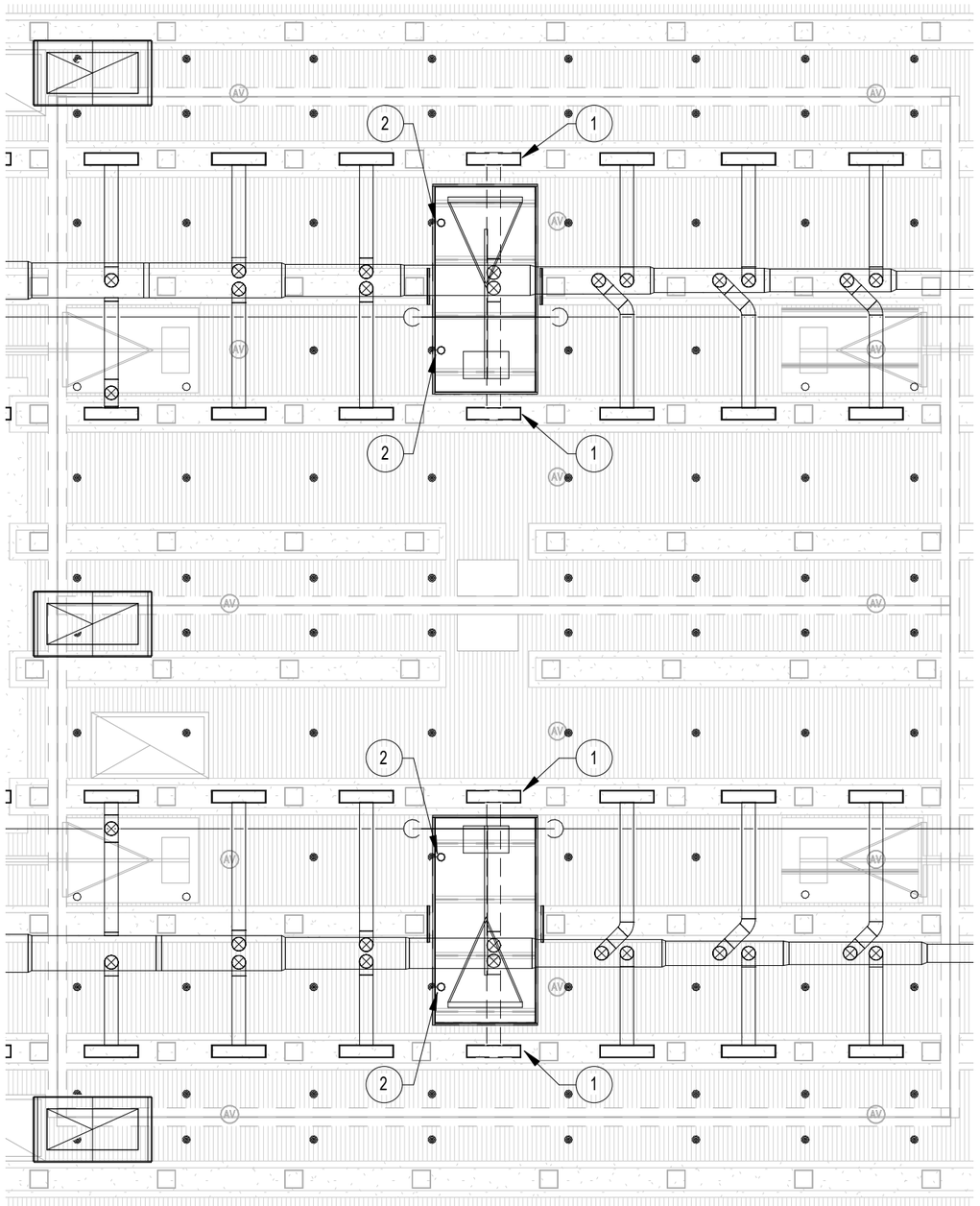

N

1

PARTIAL GYMNASIUM MECH, PLUMB & FP PLAN

1/16" = 1'-0"

MECHANICAL KEY NOTES

1 DEMOLITION OF DIFFUSER

DISCONNECT AND REMOVE EXISTING CEILING DIFFUSER AND ALL ASSOCIATED BRANCH DUCTWORK ENTIRELY. SEAL AND CAP DUCT AIR TIGHT. PATCH AND REPAIR DUCT INSULATION AT CAP. PATCH SOFFIT WHERE DIFFUSER WAS REMOVED TO MATCH EXISTING SURROUNDING CONDITIONS IN ALL RESPECTS.

FIRE PROTECTION KEY NOTES

2 SPRINKLER MODIFICATION

DISCONNECT AND REMOVE EXISTING SPRINKLER HEAD AT CEILING TO RELOCATE TO THE INSIDE EDGE OF THE NEW OPENING IN THE CEILING FOR THE BASKETBALL HOOP SYSTEM. PROVIDE NEW HEAD.

AMSCO ENGINEERING

5115 BELMONT ROAD
DOWNERS GROVE, IL. 60515

PHONE: (630) 515-1555
www.amscoengineering.com

LICENSE
#184-001333(62-044077)

LEGAT ARCHITECTS
SUSTAINABILITY | PERFORMANCE | DESIGN

College of Dupage

P.E. ARENA BASKETBALL COURT

425 Fawell Blvd.
Glen Ellyn, IL 60137

Legat Architects
651 W. Washington Blvd., Suite 1
Chicago, IL
P. 312.258.9595

www.legat.com

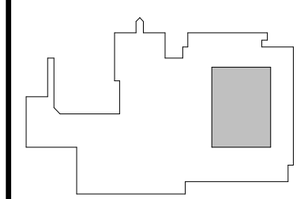

1/16" = 1'-0"

N

MECHANICAL, PLUMBING, AND FIRE PROTECTION PLAN

PROJECT NUMBER 218051
DATE OF ISSUE 02.05.2018

MPFP-1B

ISSUED FOR BID

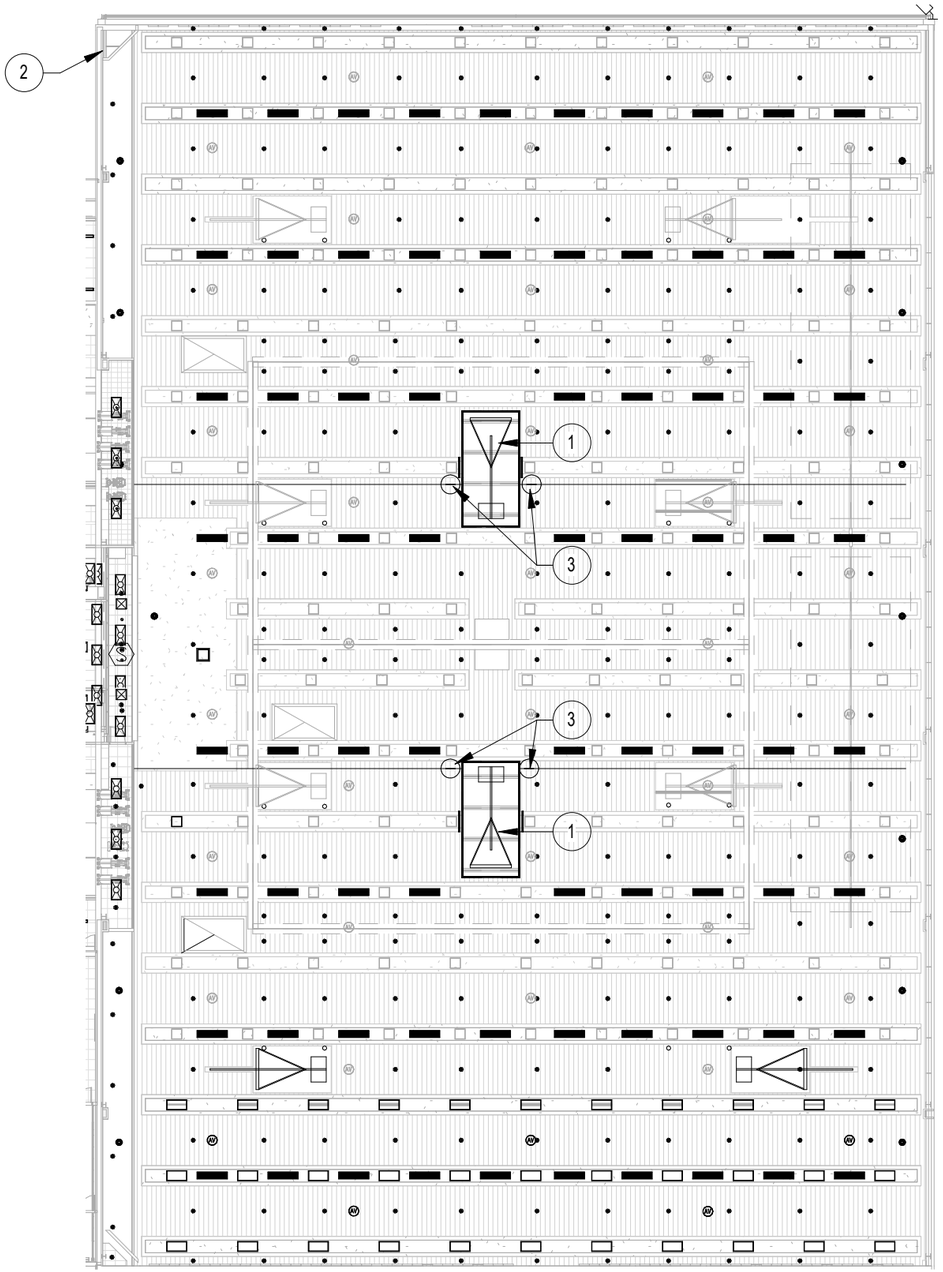

N

1

GYMNASIUM ELECTRICAL PLAN - BACKSTOPS

1" = 30'-0"

KEY NOTES

1 POWER OF NEW BACKBOARDS

TYPICAL TO (2) NEW BACKBOARD LOCATIONS. PROVIDE (2) 20A-1P CIRCUITS FROM EXISTING PANEL FEEDING EXISTING BACKBOARDS. AT CEILING, PROVIDE 20A. DUPLEX RECEPTACLE FOR BACKSTOP HOIST MOTOR AND TIME CLOCK PLUG IN, AND A SEPARATE 20A. RECEPTACLE FOR BACKSTOP HEIGHT ADJUSTER MOTOR. EACH RECEPTACLE SHALL BE ON DEDICATED CIRCUITS. ROUTE CONDUIT AND #10 WIRING DOWN TO NEW CONTROL PANEL PROVIDED BY BACKSTOP INSTALLER. COORDINATE LOCATIONS IN FIELD.

2 NEW BACKBOARD CONTROL PANEL

ROUTE WIRING DOWN IN CLOSET TO OFFSET INTO ELECTRICAL ROOM. CONNECT TO NEW CONTROL PANEL ADJACENT TO EXISTING CONTROL PANELS FOR OTHER EXISTING BACKBOARDS. PROVIDE WIRING CONNECTION TO REMOTE CONTROL SWITCHES CO-LOCATED WITH EXISTING CONTROL SWITCHES. CONTROL PANEL AND REMOTE SWITCHES PROVIDED BY BACKSTOP INSTALLER. THE INTENT IS TO MINIMIZE CEILING MODIFICATIONS TO ROUTE WIRING. ONLY ROUTE THROUGH EXISTING GYPSUM SOFFITS IF NO OTHER ROUTING IS POSSIBLE. REMOVE AND REPLACE EXISTING CEILING STRUCTURE AND PANELS AS REQUIRED TO ACCESS ABOVE CEILING FOR ROUTING. REPLACE ANY CEILING STRUCTURE AND OR PANELS DAMAGED AS PART OF THIS WORK WITH NEW SIMILAR EQUIVALENT.

3 FIRE ALARM CONDUIT

MODIFY FIRE ALARM CONDUIT AS REQUIRED TO RAISE SECTION OF CONDUIT UP INTO JOIST SPACE TO OFFSET UP OVER NEW BASKETBALL HOOP SYSTEM. INSTALL NEW JUNCTION BOXES AT ACCESSIBLE LOCATIONS. PULL NEW WIRE THROUGH CONDUIT AND BOXES BETWEEN DEVICE TERMINATIONS PER NFPA 72. REFER TO SPECIFICATIONS.

AMSCO ENGINEERING

5115 BELMONT ROAD
DOWNERS GROVE, IL. 60515

PHONE: (630) 515-1555
www.amscoengineering.com

LICENSE
#184-001333(62-044077)

LEGAT ARCHITECTS
SUSTAINABILITY | PERFORMANCE | DESIGN

College of Dupage

P.E. ARENA BASKETBALL COURT

425 Fawell Blvd.
Glen Ellyn, IL 60137

Legat Architects
651 W. Washington Blvd., Suite 1
Chicago, IL
P. 312.258.9595

www.legat.com

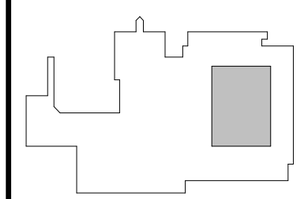

1" = 30'-0"

N

ELECTRICAL PLAN - BASKETBALL BACKSTOPS

PROJECT NUMBER 218051
DATE OF ISSUE 02.05.2018

E-1B

ISSUED FOR BID

EXHIBIT B – PREVAILING WAGE FORM

College of DuPage

Prevailing Wage Form

In an effort to meet the Prevailing Wage Survey requirements of the State of Illinois, the College of DuPage has established the Prevailing Wage Form that will assist in reporting Prevailing Wage information. Please complete the information below and return to the College of DuPage Project Manager.

Project Name: _____

Project Bid/RFP#: _____

Contractor Information:

Company Name _____

Address: _____ Suite/Floor _____

City: _____ ST ___ Zip Code _____

Phone: _____ Fax: _____

Contractor Contact Information:

First Name _____ MI ___ Last Name _____

Title _____ Email _____

City _____ ST ___ Zip _____

Primary Phone: _____

College of DuPage Project Manager: _____ Date: _____